PUBLIC SAFETY
PSWN PROGRAM
WIRELESS NETWORK

Saving Lives and Property Through Improved Interoperability

State and Local Interoperability Assistance Support— Interoperable Communications at the 2002 Winter Olympic and Para-Olympic Games

FINAL

August 2002

TABLE OF CONTENTS

Page

EXECUTIVE SUMMARY ES-1

1. INTRODUCTION 1

2. BACKGROUND 3

3. METHODOLOGY 6

4. 2002 WINTER OLYMPIC GAMES PUBLIC SAFETY PARTICIPANTS 8

4.1 Local Public Safety Agencies 8
4.2 State Public Safety Agencies 8
4.3 Federal Agencies 9

5. COMMUNICATION SYSTEMS AND INTEROPERABILITY 10

5.1 Factors Influencing Communications Planning 10
5.1.1 Public Safety Communication System Security 11
5.2 Wide Area Communication Systems 12
5.2.1 Justice Wireless Network 12
5.2.2 Integrated Treasury Network 15
5.2.3 USCS Communications System 17
5.2.4 USSS Communications System 19
5.2.5 Utah Communications Agency Network 21
5.2.6 Salt Lake County System 23
5.3 Interoperability Solutions 25
5.3.1 In-Venue Interoperability 25
5.3.2 Cross-System Interconnect 28
5.3.3 Secure Two-Way Paging 30
5.3.4 Deployable Communications 31
5.4 Commercial Services 32

6. LESSONS LEARNED 34

6.1 Operational Planning 34
6.2 Training 35
6.3 Spectrum Management 35
6.4 LMR System Planning 35
6.5 Interoperability Solutions 37
6.6 Secure Paging 37
6.7 Commercial Services 38

APPENDIX A–UTAH COMMUNICATIONS AGENCY NETWORK SUBSCRIBER RADIO ALLOCATION A-1

APPENDIX B–CROSS-SYSTEM INTERCONNECT MULIPLE SYSTEM PATCH SCENARIO B-1

APPENDIX C–ACRONYMS C-1

LIST OF FIGURES

Figure 1 2002 Winter Olympic Games Venue Locations 4
Figure 2 2002 Winter Olympic Games Communications Report Process Methodology 7
Figure 3 Salt Lake City JWN 13
Figure 4 Salt Lake City ITN System 16
Figure 5 Salt Lake City USCS System 18
Figure 6 Salt Lake City USSS System 20
Figure 7 A Depiction of the UCAN System Within the Olympic Region 22
Figure 8 Salt Lake County Sheriff's Office System 24
Figure 9 JPS System Olympic Theater Locations 26
Figure 10 Salt Lake City CSI Configuration Block Diagram 29
Figure 11 Secure Two-Way Paging Operational Diagram 30
Figure 12 Generic Deployable Interoperability Unit Conceptual Drawing 32
Figure B-1 Multiple System Patch Scenario B-1

LIST OF TABLES

Table 1 Agencies Participating in UOPSC 5
Table 2 List of Agencies Interviewed 6
Table 3 Local Public Safety Agencies 8
Table 4 State Public Safety Agencies 9
Table 5 Federal Public Safety Agencies 9

EXECUTIVE SUMMARY

More than 2,500 athletes and 1,000 officials from more than 30 nations converged at Salt Lake City during the 2002 Winter Olympic and Para-Olympic Games. Approximately 174,000 daily spectators visited 14 venues distributed throughout the Salt Lake City metropolitan area and its neighboring jurisdictions of Ogden, Provo, Park City, and Heber. Anticipating a monumental task in ensuring safety and security of the public at large, public safety agencies started preparation years before the first event took place. Public safety radio communications was a key element in ensuring the protection of lives and property during the Games. This report documents the level of effort public safety agencies took to plan and implement their radio communication systems in support of the Games. The report also captures how local, state, and federal public safety agencies used their radio communications systems to achieve interoperability—seamless, coordinated, integrated public safety communications that promote safe, efficient protection of life and property—during the Games. Most importantly, this report renders lessons learned for future large-scale joint operations like the 2002 Winter Olympic Games.

In 1998, the Utah state legislature enacted a statute establishing the Utah Olympic Public Safety Command (UOPSC) to provide cohesive planning and implementation of public safety operations. This law permitted UOPSC to create a unified command of local, state, and federal public safety agencies involved in Olympic security. The participating agencies worked together to tackle a broad range of operational and technical issues. This interagency cooperation has strengthened public safety in Utah and made a long-lasting positive impact.

Because of the coordinated effort, public safety agencies were prepared and their land mobile radio (LMR) communications were well implemented. On the state and local level, many agencies relied on the Utah Communications Agency Network (UCAN) system, an integrated 800 megahertz (MHz) trunked network providing communications to more than 90 government agencies. The Salt Lake County Sheriff's Office (SLCSO) and Salt Lake City Police Department, on the other hand, relied on the SLCSO 800 MHz trunked system. On the federal level, the Department of Justice's Justice Wireless Network (JWN) provided radio communications for the different bureaus supporting the Games, including the Bureau of Prisons, the Federal Bureau of Investigation, the Immigration and Naturalization Service, and the U.S. Marshals Service. Similarly, the Department of the Treasury implemented the Integrated Treasury Network (ITN) to provide radio communications to all bureaus within Treasury supporting the Games, including the Bureau of Alcohol, Tobacco, and Firearms, the Internal Revenue Service, the U.S Customs Service, and the U.S. Secret Service. These were the key public safety radio communications systems that supported theater-wide operations and interagency communications.

To enhance interoperability between the JWN, the SLCSO system, and the UCAN system, the Public Safety Wireless Network (PSWN) Program implemented the Cross-System Interconnect (CSI) interoperability solution. The CSI interoperability concept is based on cross-connecting the agencies' consoles at strategic locations using base interface module (BIM)-to-BIM circuits in central electronics banks. Each agency-to-agency link consisted of three patches—one for primary use, one for secondary use, and a third as a backup or for emergency

situations. Agencies on each of the disparate LMR systems successfully communicated during the Games.

The PSWN Program also implemented a secure two-way paging pilot at the Games. The program distributed secure two-way pagers to several agencies to facilitate secure intra-agency and interagency collaboration.

In addition, the UOPSC deployed JPS ACU-1000 units at all venues to enhance agency interoperability within the venues. The JPS unit is an audio switch that establishes audio connectivity between different types of radios. UOPSC installed the units to provide radio communications between agencies that were responsible for public safety at the Olympic venues.

Some of the interoperability systems were tested and were deemed functionally usable. However, several operational issues limited the full use of the systems.

To supplement the private wide area LMR systems and interoperability solutions, public safety agencies used commercial services throughout the Games. The commercial wireless services used included Nextel radios, AT&T cellular telephones, one-way paging devices, and cellular digital packet data services.

The successful implementation of wide area LMR systems and interoperability solutions, as well as the use of commercial services, gave public safety agencies a sense of security at the Games. Although no major crisis tested the communication capability of each agency, public safety personnel from the local, state, and federal levels knew that they had the ability to contact the appropriate personnel when needed. The level of success achieved at the Games can be attributed to proactive long-term planning and agency collaboration.

As a result of interviews, data collection, and analysis, the PSWN Program identified the following list of lessons learned that would facilitate reliable public safety communications for agencies supporting large operations in the future:

Operational Planning

- A central coordinating committee should be established to help agencies work together in large multi-agency operations.
- Local, state, and federal agencies should be proactive in developing agreements and procedures for reliable communications for all public safety agencies.
- An Incident Command System should be established to facilitate the command and control structure allowing public safety agencies to respond to an emergency.
- Dispatch centers should be staffed appropriately during major events.
- Well-planned contingency procedures should be developed and backup systems should be deployed to mitigate the possibility of a system failure.
- Standardized radio call signs should be established to help resource management in emergency situations.

Training

- Planning agencies should include dispatch centers in emergency response drills.
- Routine radio training should be established to provide users with information on the full capabilities of their radios.
- Training local and state law enforcement agencies in the use of encrypted radios should help interoperability with federal agencies in large operations.

Spectrum Management

- During the Games, there was a need for nationwide interoperability channels to foster communication between the participant agencies. Although these channels have been identified, they can not be used until all Federal Government land mobile operations have transitioned to the National Telecommunications and Information Administration's (NTIA) mandated narrowband frequencies.
- A nationwide air-to-ground radio channel should be considered.
- A special-event spectrum manager should be designated to prevent resource mis-allocation.

LMR System Planning

- Implementing a shared network infrastructure should be considered to enhance reliability and interoperability between agencies within the system.
- Talk group management should be established to reduce network traffic during peak hours.
- System planners should fully understand capacity planning.
- System planners should define a standard set of features that would be programmed into all radios operating on the system prior to system deployment.
- Remote diagnostics should be implemented at all LMR sites.
- System planners should account for different encryption schemes that could be incompatible.
- Users new to a radio must be provided with knowledge about the functionality of the radio.

Interoperability Solutions

- CSI users and dispatch operators should be trained well before the solution is used for public safety support.
- Planning for an interoperability solution should start as soon as system interoperability requirements are known.

- To mitigate operational challenges, the JPS ACU-1000 units should be tested rigorously against all conceivable operational and logistic scenarios to ensure a successful completion of the planning stage.
- Interoperability solutions deployed for a one-time event should be considered part of the LMR system design and included in the system acceptance testing.
- As part of the planning for different interoperability scenarios, system planners should consider deployable communications units.

Secure Paging

- Training on secure two-way pagers should be available and mandatory.
- Public safety teams using secure two-way pagers must provide them to all team members to be effective.
- Individual agencies should provide personnel to support the secure two-way paging network with equipment accountability, user support, and a point of contact for vendors.

Commercial Services

- Commercial service providers must be cooperative with public safety agencies to reduce frequency interference between the different systems.

1. INTRODUCTION

The Public Safety Wireless Network (PSWN) Program works with the public safety community to improve interoperability—seamless, coordinated, integrated public safety communications that promote safe, efficient protection of life and property. The program pursues this goal by promoting coordination and partnership, seeking funding alternatives, advocating adequate public safety spectrum allocations and efficient spectrum use, supporting technical standards development, and fostering secure communications.

In accordance with its mission, the PSWN Program initiated an effort to document the level of effort public safety agencies expended to plan and implement their radio communications in support of the 2002 Winter Olympic Games held in Salt Lake City, Utah. This report covers the following key findings:

- Public safety participation in the Games
- Communications systems supporting public safety operations
- Interoperability solutions deployed to facilitate public safety collaboration
- Lessons learned from planning, coordinating, and implementing communications systems.

The remainder of this report is organized in the following sections:

- **Section 2—Background.** This section presents an overview of the operating environment at the 2002 Winter Olympic Games.
- **Section 3—Methodology.** This section describes the process of data collection, analysis, and development of the report.
- **Section 4—2002 Winter Olympic Games Public Safety Participants.** This section provides an overview of local, state, and federal agencies involved in the planning, coordination, and implementation of radio communication resources during the Games.
- **Section 5—Communications Systems and Interoperability.** This section provides technical and operational analyses of the communication systems used during the 2002 Winter Olympic Games.
- **Section 6—Lessons Learned.** This section documents the lessons learned for future public safety communication coordination.
- **Appendix A—Utah Communications Agency Network Subscribers.** This section lists the subscribers on the Utah Communications Agency Network (UCAN).

- **Appendix B—Cross-System Interconnect Multiple Patch Scenario.** This section outlines an example of interagency communication procedures based on a Cross-System Interconnect (CSI) multiple patch scenario; a graphical presentation and a list of steps required to set up the patch is provided.

- **Appendix C—Acronyms.** This section lists all acronyms used in this report.

2. BACKGROUND

More than 2,500 athletes and 1,000 officials from more than 30 nations converged at Salt Lake City to participate in the Winter Olympic Games from February 8 to February 24, 2002, and the Winter Para-Olympic Games from March 7 to March 16, 2002. Approximately 174,000 daily spectators visited 14 venues distributed throughout the Olympic theater.

The Games took place on 1,800 square miles of urban, mountain, and desert terrain—making communication interoperability a difficult task for agency planners. The Olympic athletes would compete in 150 events in seven sports at 10 competition venues, while the Para-Olympic athletes would compete in 34 events in four sports at four competition venues. Figure 1 displays the Olympic venue locations throughout the following five regions in Utah: Ogden, Heber, Salt Lake City, Park City, and Provo. Olympic competitions and key functions took place at the following locations:

Competition Venues

- Ice Sheet at Ogden
- Snowbasin Ski Area
- Salt Lake Ice Center
- E-Center
- Utah Olympic Oval
- Utah Olympic Park
- Park City Mountain Resort
- Deer Valley Resort
- Soldier Hollow
- The Peaks Ice Arena

Olympic Interests

- Medals Plaza
- Olympic Village
- Olympic Stadium

Security has been a major concern for the Olympic Games since the massacre at the 1972 Munich Games, when Palestinian terrorists killed 11 Israeli athletes and coaches. In 1996, despite the many security steps taken to make the Atlanta Olympic Games safe, the Centennial Olympic Park bombing could not be stopped.

Knowing the threat for terrorism was high, public safety interoperability planning for the 2002 Winter Olympic Games started well before the athletes would compete. Public safety radio communications was a key element in ensuring the protection of lives and property during the Games. The September 11 terrorist attacks only strengthened the need for interoperability and coordination among the public safety agencies supporting the Games. Following the terrorist attacks, agency interoperability requirements were increased and quickly implemented to help improve information sharing and coordination, thus helping to prevent and mitigate possible attacks at the Games.

Planning for radio coverage in the Salt Lake City region was not a problem. However, planning for the required coverage in the mountains around Salt Lake City was difficult. Most agencies, aware of the problem, had to plan for the addition of extra repeaters and tower sites. Agencies worked together to resolve issues related to coverage and capacity. Attending Olympic

public safety meetings became a full-time job for many communication managers for a full year before the Games.

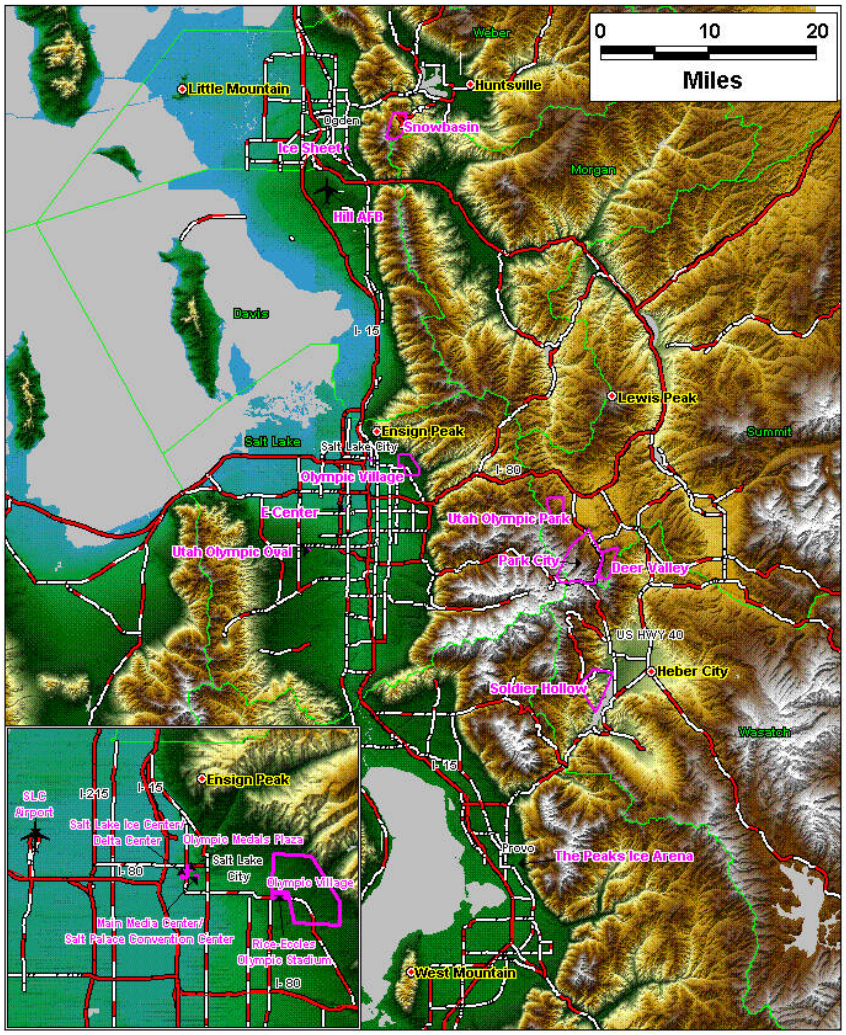

Figure 1
2002 Winter Olympic Games Venue Locations

Not only did agencies have to plan for reliable coverage and system capacity throughout the Olympic theater, they had to plan for interoperable communications with other public safety agencies. Dependable interoperability solutions would be the "glue" holding the different agency networks together, allowing public safety personnel to communicate with all appropriate agencies during a crisis.

In 1998, the state legislature enacted a statute establishing the Utah Olympic Public Safety Command (UOPSC). This law permitted UOPSC to create a unified command of local, state, and federal public safety agencies involved in Olympic security. For the first time at an Olympic Games in the U.S., security planning became a large-scale team effort, drawing together local, state, and federal agencies working side-by-side to achieve a common goal. This

interagency cooperation has strengthened public safety efforts in Utah. Table 1 lists the public safety agencies that participated in the command. These agencies were the core participants in support of the 2002 Winter Games security.

Table 1
Agencies Participating in UOPSC

Agency	Level of Government
Emergency Medical Services	Local
Fire Services	Local
Ogden Police Department	Local
Park City Police Department	Local
Provo Police Department	Local
Salt Lake County Sheriff's Office	Local
Salt Lake Organizing Committee	Local
Summit County Sheriff's Office	Local
Wasatch County Sheriff's Office	Local
Weber County Sheriff's Office	Local
West Valley Police Department	Local
Comprehensive Emergency Management	State
Public Works Services	State
Salt Lake City Police Department	State
University of Utah	State
Utah Department of Public Safety	State
Utah National Guard	State
Bureau of Alcohol, Tobacco, and Firearms	Federal
Federal Bureau of Investigation	Federal
U.S. Secret Service	Federal

3. METHODOLOGY

To determine the state of communications at the 2002 Winter Olympic Games, the PSWN Program completed a data collection process in which it tapped several sources with on-site knowledge. The data collection team conducted several interviews with technical representatives from public safety agencies providing communications support during the Games. Using a targeted questionnaire as a guide, data collection efforts focused on agency-to-agency and intra-agency communications during the Games.

The data collection team focused on the following key issues during the interviews:

- Cross-agency communication planning efforts
- Venue and wide area network operations
- Network interoperability solutions
- Commercial services system integration.

In an effort to manage the data collection process, the data collection team identified agencies that were instrumental in the set-up and establishment of the communication systems deployed in the 2002 Winter Olympic Games theater. The agencies listed in Table 2 were considered key Olympic public safety agencies and the data collection team interviewed personnel from these agencies during the data collection process. These key Olympic public safety agencies provided first-hand knowledge of the state of communications at the Games.

Table 2
List of Agencies Interviewed

Key 2002 Winter Olympic Games Agencies	Level of Government
Salt Lake City Police Department	Local
Salt Lake County Sheriff's Office	Local
Valley Emergency Communications Center	Local
Utah Communications Agency Network	State/Private
Utah Department of Public Safety	State
Department of Defense	Federal
Department of Justice	Federal
Department of the Treasury	Federal

Figure 2 illustrates the process used to analyze the data and provide a framework for assessing the findings. When compiled and analyzed, the findings provide a comprehensive view of the cross-agency planning and collaboration established to provide adequate and reliable communication systems during the 2002 Winter Olympic Games. The recommendations generated from this analysis are derived directly from the examination of these important findings.

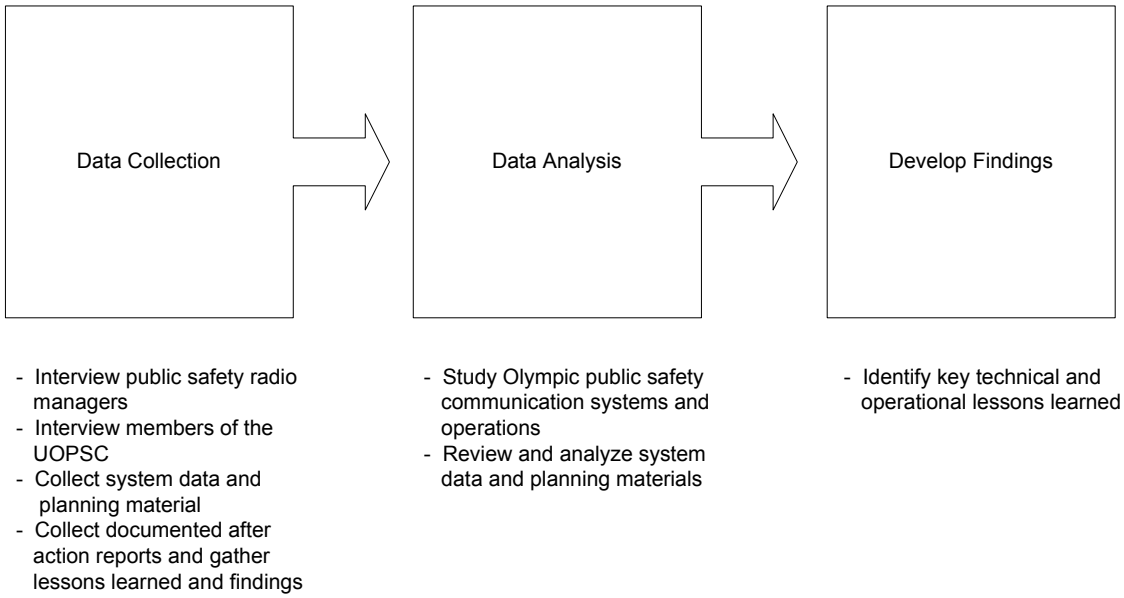

Figure 2
2002 Winter Olympic Games Communications Report Process Methodology

4. 2002 WINTER OLYMPIC GAMES PUBLIC SAFETY PARTICIPANTS

This section briefly describes the local, state, and federal public safety agencies that participated in the preparation and execution of plans to provide for the safety and security of the Salt Lake City region. The agencies identified were involved in the planning of radio resources or used public safety radio communications in support of their missions. Subsequent sections provide further description of the roles these agencies played and how each used the radio systems in providing services for the Games.

4.1 Local Public Safety Agencies

Two primary land mobile radio (LMR) systems in the greater Salt Lake City region serve local public safety agencies—the Salt Lake County Sheriff's Office (SLCSO) system and the UCAN. These two systems provide the LMR backbone used to dispatch many local law enforcement agencies, fire departments, and emergency medical services (EMS). Table 3 provides a general overview of the local law enforcement agencies supporting the Games. Appendix A contains a complete list of agencies operating on the UCAN system.

Table 3
Local Public Safety Agencies

Agency	Primary System/Involvement
City of Ogden Police Department	UCAN
City of Provo Police Department	UCAN
Davis County Sheriff's Office	UCAN
Davis County Sheriff's Office	UCAN
Heber City Police Department	UCAN
Morgan County Sheriff's Office	UCAN
Park City Police Department	UCAN
Summit County Sheriff's Office	UCAN
Utah County Sheriff's Office	UCAN
Wasatch County Sheriff's Office	UCAN
Weber County Sheriff's Office	UCAN
Salt Lake City Police Department	SLCSO System
Salt Lake County Sheriff's Office	SLCSO System
Salt Lake Valley Emergency Communications Center*	Regional Dispatch Center

* Regional dispatch agency serving 19 public safety departments in the greater Salt Lake Valley

4.2 State Public Safety Agencies

After the International Olympic Committee announced its selection of Salt Lake City as the site for the 2002 Winter Olympic Games, the State of Utah took a proactive role in planning for the safety and security of residents, tourists, competitors, spectators, staff, and others involved in the Games. Table 4 provides a general overview of the key state agencies involved.

Table 4
State Public Safety Agencies

Agency	Primary System
Utah Department of Corrections	UCAN
Utah Department of Public Safety (DPS)/ Highway Patrol	UCAN
Utah DPS/Communications Emergency Management	UCAN
Utah Department of Transportation	UCAN
Utah National Guard	UCAN

4.3 Federal Agencies

The Federal Government became involved in the 2002 Winter Olympic Games because of the expected arrival of more than 2,400 foreign diplomats, international Olympic athletes, and their administrative teams, as well as officials from foreign governments expected to participate, support, or view some or all of the events scheduled for competition. The expected attendance of high-ranking federal officials, up to and including the President of the United States, also meant that federal agencies should and must participate in planning for public safety and security at the Games. Table 5 provides an overview of the federal agencies involved.

Table 5
Federal Public Safety Agencies

Agency	Primary System/Involvement
Department of Defense	
Defense Information Systems Agency	Provided radio resources
Hill Air Force Base	UCAN
U.S. Navy	Provided radio resources
Department of Justice	
Bureau of Prison	JWN
Federal Bureau of Investigation	JWN
Immigration and Naturalization Service	JWN
U.S. Marshals Service	JWN
Department of State	
Diplomatic Security	USSS System, ITN
Department of the Treasury	
Bureau of Alcohol, Tobacco, and Firearms	ITN
Internal Revenue Service	ITN
U.S. Customs Service (USCS)	USCS System, ITN
U.S. Secret Service (USSS)	USSS System, ITN
Other Federal Agencies	
Federal Communications Commission	Frequency coordination
Federal Emergency Management Agency	Disaster and emergency management

5. COMMUNICATION SYSTEMS AND INTEROPERABILITY

Given the different levels of government and the various communications systems providing support at the 2002 Winter Olympic Games, several factors influenced communications planning as well as operational and technical aspects of each system. In addition, because every participating Olympic public safety agency played a specific role in the safety of the Games, each agency had unique communications requirements. Each communications system discussed in this section was designed to meet the coverage, capacity, security, reliability, and interoperability requirements of the agencies it supported. Agencies relied on wide area LMR networks, venue-specific communications systems, deployable communication units, and commercial services throughout the Games. In addition, several interoperability solutions were developed to connect the agencies' disparate LMR networks. This section describes the different communications systems and their interoperability with other networks.

5.1 Factors Influencing Communications Planning

Multiple local, state, and federal wide area LMR networks were already in place prior to the 2002 Winter Olympic Games. Each of the local and state communications networks were assessed, beginning as early as 1998, when Olympic support agencies began assigning communications planners; federal communication planners started soon after. They focused on ensuring that the existing communications infrastructure in the greater Salt Lake region would be sound, reliable, and well protected.

A team representing communications planners at the local, state, and federal levels attended the 2000 Sydney Summer Olympic Games to observe and gather first-hand knowledge on the different public safety communication systems. These planners focused their attention on the infrastructure developed for delivering effective public safety communications.

In addition, the Salt Lake City planners conducted several drills and exercises to simulate situations requiring multilevel public safety responses, including acts of civil disobedience, terrorism, and mass casualty incidents. Each drill scenario required participation and teamwork from all levels of government, and a common incident command system (ICS) to ensure effective operations. Among the drills conducted was the Federal Training Exercise (FTX), held April 1–6, 2001. Drill participants were charged with the responsibility of responding to different emergency situations using the existing LMR resources. The FTX provided communications planners with valuable, experience-based feedback that they could incorporate into the development of the communications infrastructure for the 2002 Winter Olympic Games.

During the early planning stages, planners determined that a significant amount of training was needed on the current radio equipment. This was especially true of local and state public safety personnel, who, for the first time, would be using encrypted LMR equipment. They were unaccustomed to the sound quality heard over an encrypted radio, the user requirements to access encrypted systems, and to the diminished signal strength encountered when using an analog radio in the encrypted mode. It was also apparent that staff assigned to the Joint Operations Center (JOC) required additional training beyond that needed by field users. Because the JOC staff were unable to manage the new channel plan and were unfamiliar with the

radios issued to field personnel, users were not provided with adequate operational and technical support. Furthermore, the operational participants identified a need for the addition of a talk-around channel to their interoperable communications resources. This and the other needs identified were all noted and contingencies were planned for each.

The September 11 terrorist attacks affected communications planning by raising the standard applied to emergency preparations and contingency planning. The contingency standard was no longer, "what to do in case of fire in your communications facility," but rather, "what to do in case your communications facility is reduced to a smoking hole in the ground." Disaster recovery and contingency plans were approached with this thought at the forefront. This was a grim scenario, but with the heightened sense of the need for tight security and disaster preparedness created by the events of September 11, it became the rule applied to all planning efforts.

The use of encrypted voice and data wireless communications through government and commercial networks had been a matter actively debated from 1998 until September 11, 2001. The terrorist attacks put to rest any notions that wireless communications would be conducted in the clear (i.e., without any encryption) over federally operated networks.

In addition, with so many agencies operating in the region and sharing the same voice channels or talk groups, it was important that recognizable call signs be established so that each agency would be identifiable, and so that the roles of each agency's staff members were clear to others. Planners from the Department of the Treasury (Treasury) and the Department of Justice (DOJ) worked together to develop the designator system, which included some false designators. False designators were designed to counter outside or unauthorized listeners who might have wanted to use the call sign information for planning or committing crimes.

5.1.1 Public Safety Communication System Security

During the Games, public safety agencies operated their communication systems with an increased level of security. Agencies prepared for personnel, communications, and site security.

Each agency prepared for different levels of security for personnel operating their system resources. Interagency radio sharing occurred between agency personnel with similar operational assignments. Because all radio users, including volunteers, had to be trusted, the U.S. Secret Service (USSS) performed background checks on all amateur radio (HAM) operator volunteers to ensure their credibility and to mitigate security leaks.

Because communications security was critical to federal public safety agency operations at the Games, each federal LMR system operated in encrypted mode, protecting transmitted signals from being understood by unauthorized parties. System planners had to account for operational security when preparing for use of agency interoperability solutions. Each interoperability solution was designed to give agency personnel the appropriate access to one another's communications systems.

In addition, physical site security was important in maintaining secret system information and preventing site destruction. The UOPSC identified eight radio sites, including some of the

USSS sites that were critical to all public safety operations. The UOPSC heightened security protection at these critical sites to safeguard against any unauthorized intrusion. Monitoring alarms were installed for all shelters and around the perimeters of these sites. The sign "No Trespassing" was posted at the sites to warn against any unauthorized intrusion. In addition, the UOPSC established strict procedures for visiting these sites. An entity or agency had to notify the UOPSC Communications Special Management Group prior to any site visit. The UOPSC Communications Special Management Group would then perform a name check to verify identity prior to granting the approval. If an alarm at the site was activated, the UOPSC would check for any scheduled site visit by any agency or company. If no known visits were planned, the Aviation Security Operations Center (ASOC) and the local Agency Command Center (ACC) would be notified for a response. A local law enforcement agency would be dispatched to check the radio site. If the situation warranted, a Federal Bureau of Investigation (FBI) Special Weapons and Tactics (SWAT) team could be deployed.

5.2 Wide Area Communication Systems

Several wide area systems supported public safety and security during the Games. These systems include the Justice Wireless Network (JWN), Integrated Treasury Network (ITN), U.S. Customs Service (USCS) system, USSS system, UCAN, and the SLCSO system. The following subsections describe these networks and the means of interoperability that was implemented between the networks.

5.2.1 Justice Wireless Network

The DOJ's JWN is a digital, narrowband, encrypted, conventional radio system that operates in the VHF band and is partitioned into service areas corresponding to user operational needs. The system was designed to consolidate DOJ's wireless communications resources into a single system directly supporting the Bureau of Prisons (BOP), FBI, Immigration and Naturalization Service (INS), Drug Enforcement Agency (DEA), U.S. Marshals Service (USMS), and the Office of Inspector General (OIG). The BOP, FBI, INS, and USMS had wireless communications requirements in support of the Games, while the DEA and OIG indicated that they had no Olympics-specific requirements. Among the different DOJ components, FBI was the main user on the JWN system, contributing a majority of radio traffic during the Games.

An overview of the JWN system is presented in Figure 3.

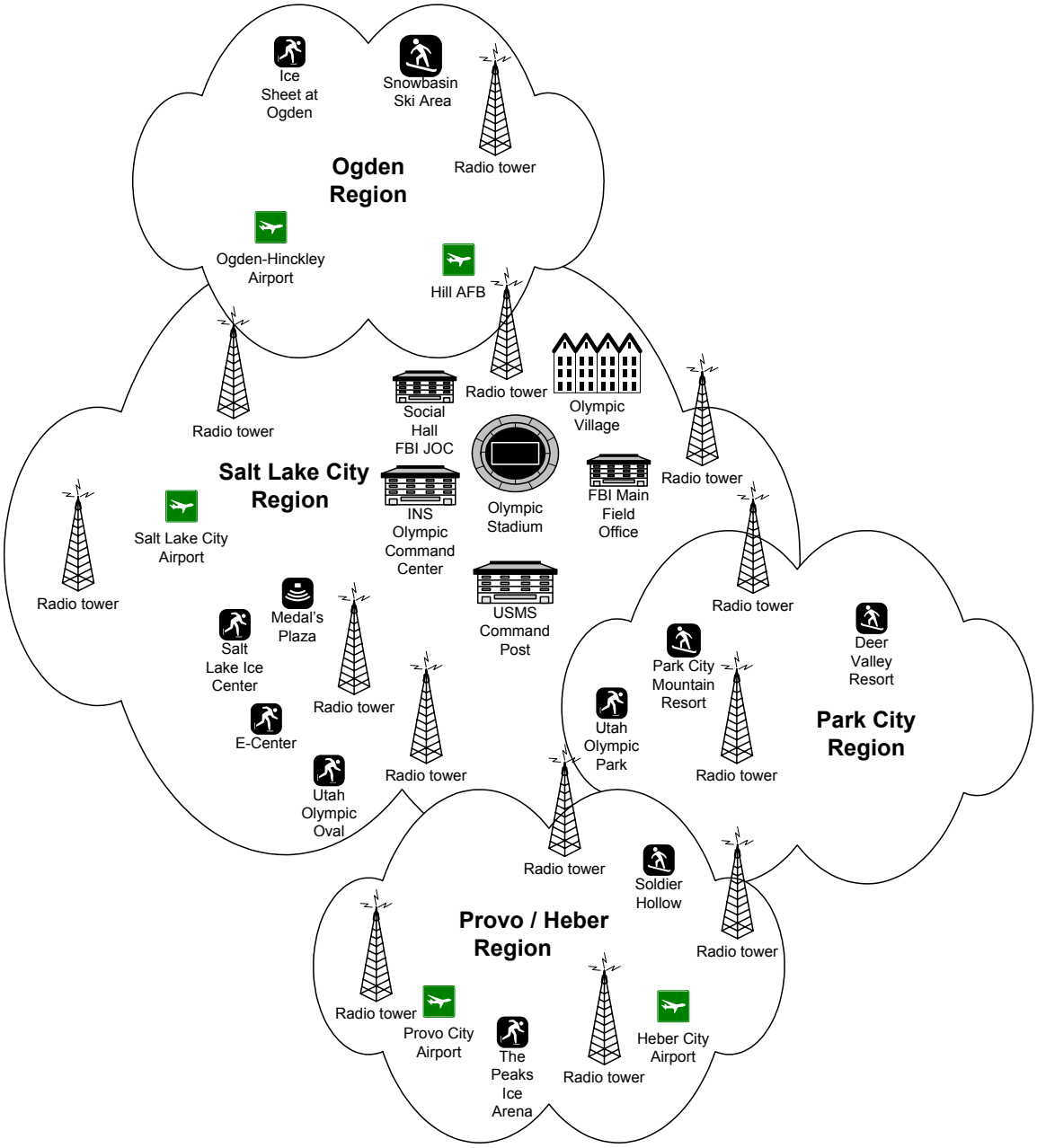

Figure 3
Salt Lake City JWN

The JWN was structured to provide coverage at all Olympic venues and key transit routes. Multiple voting and standalone systems were provided to support communications at Olympic venues while a single wide-area channel was used to provide communications along all transit routes in the Olympic region. Sites were linked to control consoles via landline or microwave circuits. Most of the JWN consoles were based in Salt Lake City, but some were located in Provo and Ogden.

In an effort to minimize traffic on the JWN infrastructure, JWN radios were also programmed with simplex channels, allowing participants to communicate subscriber-to-subscriber in their specific venue.

During the Games, JWN users could initiate any one of three interoperability solutions to communicate with local, state, and federal public safety agencies. Two of these, a cross-connect through a JPS switch and a console patch, are detailed in Section 5.3. In addition, users could also employ a Treasury simplex interoperability channel.

Along with the wide area systems, the JWN planned for command and control backup and coverage augmentation. Desktop radios and transportable base station packages were set up at each console location to provide backup capabilities. Transportable base stations were also set up, in addition to desktop radios, to support SWAT teams as additional backup and to provide mobile command and control capabilities. In the event that additional coverage might have been required, three transportable repeaters were preconfigured and ready for deployment when needed.

As a part of its Olympic preparation, DOJ staged emergency communication packages at five locations throughout the Olympic region. These packages included antennas, mobile and portable radios, code plugs, connectors, dial-up repeaters, transportable base stations, and channel site maps. The packages were pre-staged to ensure proper operation during emergencies. DOJ also made available the Field Investigative Support Trailer (FIST), discussed in Section 5.3.4, for any interoperable communication emergencies at the Games. The FIST, however, was never used during the Games.

In addition to the infrastructure support, the JWN planners created a scenario book to identify potential problems that might be encountered during the Games. Both crisis and routine scenarios were included to illustrate the proper flow of communications, a protocol for achieving that flow, and a description of the mode of communications that would be in effect during the given scenario. Plans were also established to assign FBI staff to the federal JOC to assure communications were disrupted only minimally for each venue, the UOPSC, and for the designated travel routes between venues and support facilities.

No interference was reported on the JWN system during the Games. However, a potential source of interference was uncovered. The Salt Lake Organizing Committee (SLOC) was authorized by the Federal Communications Commission (FCC) to license channels to international athletic teams for LMR communications among support staff and their competing athletes. Through a misunderstanding regarding available spectrum, the SLOC licensed a few of the DOJ assigned frequencies to several foreign teams. None of the teams using the DOJ assigned frequencies advanced in their competitive efforts, and they left the country early in the course of the Games. As a result, there were no impacts on DOJ operations. Had other circumstances prevailed, this would have presented a significant problem for the JWN.

At the conclusion of the Games, the JWN system was scaled down to meet the requirements of Justice agents staffed in the Salt Lake City region.

5.2.2 Integrated Treasury Network

Treasury chose Salt Lake City as the first location to implement the ITN, addressing the need for a unified communication system to support Treasury bureaus during the Games. The ITN system is a VHF, digital two-way, encrypted, conventional radio system. The system was designed to consolidate Treasury's wireless communications resources into a single system supporting the different law enforcement and protective operations of the Treasury bureaus. The ITN system directly supported USSS, USCS, the Internal Revenue Service (IRS), and the Bureau of Alcohol, Tobacco, and Firearms (BATF) during the Games. All Treasury bureaus were able to use the ITN system throughout the Olympic region.

The primary means for accomplishing interagency communications over the ITN system was by providing nonfederal users with ITN-based radios. The bulk of these radios were provided by the IRS, which was completing its support of criminal justice activities at the World Trade Center crime scene in New York City and its support of security activities at the Super Bowl in New Orleans, Louisiana. The timely conclusion of IRS support activities at these locations allowed the IRS equipment to be redeployed to the Games, where thousands of radios needed to be deployed. Provisioning state and local personnel with federal radios eliminated the stovepipe effect that would have otherwise acted as an obstacle to effective interoperable communications.

The ITN system has an LMR backbone consisting of six radio sites, as depicted in Figure 4. Two of the sites were added to help support the communications effort during the Games and were taken down at the conclusion of the Games, leaving four ITN sites for future support of Treasury personnel in the Salt Lake City region. Licensed microwave equipment and unlicensed microwave equipment (i.e., equipment operating in the Industrial, Scientific, and Medical [ISM] Band 2.4 – 2.5 MHz FCC Part 90) , along with leased digital data service lines provided the necessary connectivity between the six radio sites with the National Law Enforcement Communications Center (NLECC) in Orlando, Florida. The Treasury Joint Program Office had agreements with the different government and commercial network providers to establish these links. The NLECC, the ITN national dispatch center, provides users with round-the-clock emergency backup, command, control, and communications. To ensure proper operation of the system, the NLECC took advantage of a code-operated switch to provide remote diagnostics, allowing site analysis without dispatching a technician to the site. In addition, to establish secure communications, the ITN established an over-the-air rekeying (OTAR) channel, allowing Treasury bureaus to perform wide-area rekeying; thus, ensuring each radio was operating in the secure communications mode. An estimated 1,200 ITN system users took advantage of OTAR capabilities during the Olympic Games.

Furthermore, during the Olympic Games, each agency on the ITN system had the capability to interoperate with key local, state, and federal agencies through the NLECC in Orlando. A NLECC system administrator had the ability to interoperate with other agencies through frequency sharing, radio sharing, and dispatch-to-dispatch patching. At the Olympic venues, other Olympic public safety participants could link into the ITN through the USSS radios. The majority of key Treasury bureau personnel carried multiple radios to interface with the participating public safety agencies at the Games.

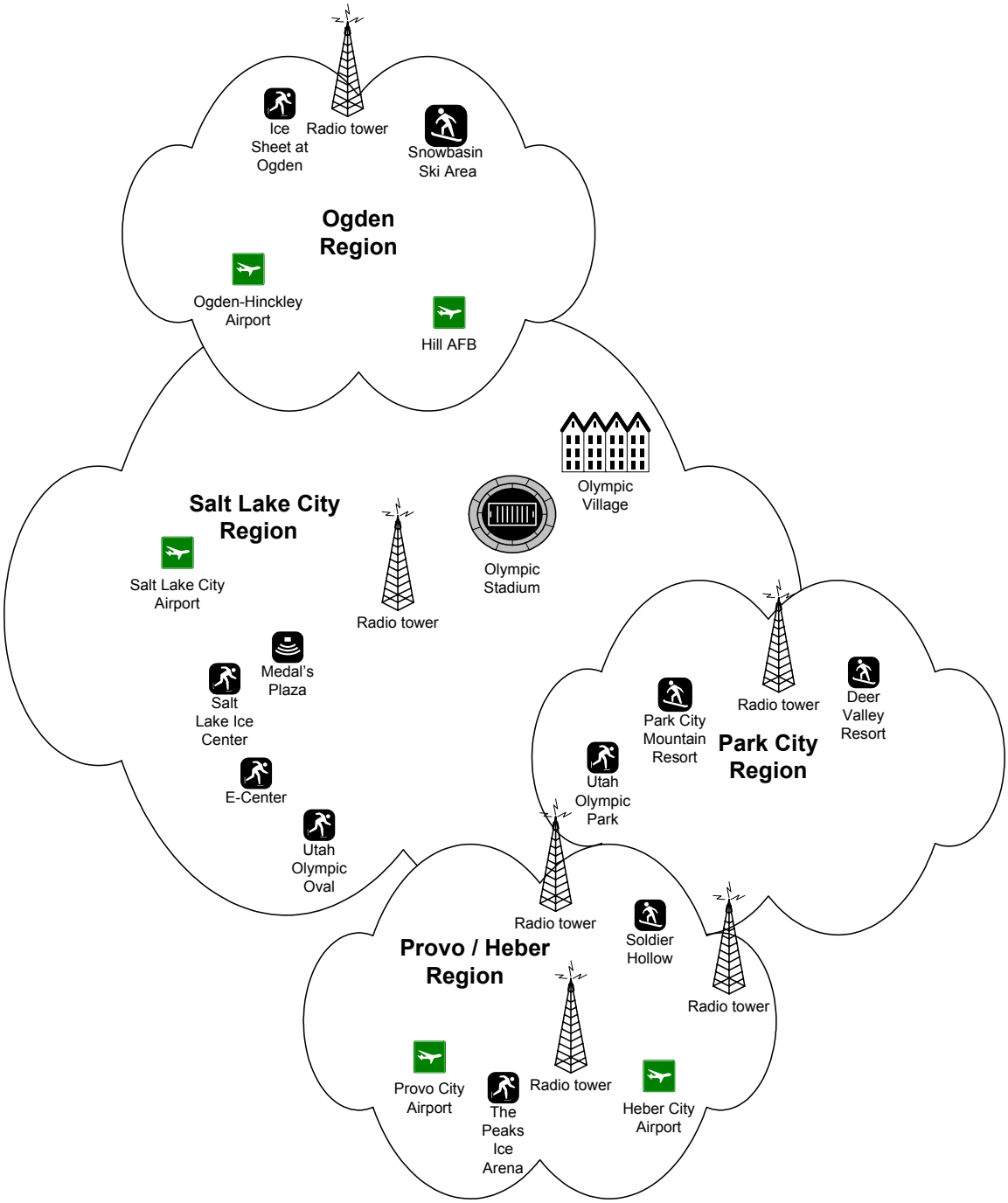

Figure 4
Salt Lake City ITN System

In addition, remote consoles in the Salt Lake City area provided BATF and USCS personnel with direct access to the NLECC. BATF personnel connected to the NLECC through a remote console located at the BATF Field Office in Salt Lake City, while USCS personnel connected to the NLECC through a remote console located at Hill Air Force Base. This

configuration provided the level of redundancy needed to ensure continual operations during an emergency.

Not only did different Treasury bureaus have local consoles, but several also had an agency-specific wide-area LMR system. Both USCS and USSS had agency-specific LMR systems, see Sections 5.2.3 and 5.2.4, in the Olympic region during the Games; both networks could patch into the ITN system through secure links to the NLECC.

Treasury secured its ITN frequency plan well before the Olympics. Radio frequency roundtable meetings were held to discuss local, state, and federal public safety frequency requirements. Agencies were able to collaborate and adjust their frequency plans to meet the needs of other Olympic public safety participants.

Despite proactive frequency planning efforts, frequency interference became an issue during the Games. On February 9, 2002, the SLOC informed UOPSC that some radio channels designated for use by the international Olympic teams experienced interference from federal public safety users. The UOPSC immediately investigated the interference issue and discovered that the SLOC had assigned spectrum in the 166–170 megahertz (MHz) range to international Olympic teams, including 89 federal law enforcement frequencies in use by Treasury. A meeting was called with SLOC, FCC, and Treasury. The SLOC asked USSS to reprogram its radios to avoid any conflict. USSS did not yield, and the FCC stood by its promise to protect public safety spectrum against any external interference. The FCC indicated to the SLOC that it had misinterpreted a statute and must back down. After several long meetings, the SLOC finally complied, and the foreign national teams were given Department of Defense (DoD) channels and radios, which mitigated any interference that would have been caused by the mis-assignment.

Treasury initiated a contingency plan for the ITN system in the event of emergencies or equipment failure. The contingency plan was tested against various scenarios during a tabletop discussion. Fortunately, the Games were held without any incident requiring the escalation of communications and emergency response. Because the ITN system was used only for regular event and day-to-day operations, its reliability and interoperability were never fully tested. The system worked as planned, and there were no known system or interoperability crisis issues recorded relating to the ITN system during the Games.

5.2.3 USCS Communications System

The USCS system is an agency-specific network that provided agency personnel with communications support for air and marine interdiction. The USCS system is a VHF, analog, encrypted, conventional network intended to support this mission-specific goal during the Games. This system included five radio sites, as depicted in Figure 5, to provide the needed coverage at the airport and maritime locations. In addition, USCS used the ITN to support customs inspectors at various Salt Lake City region airports.

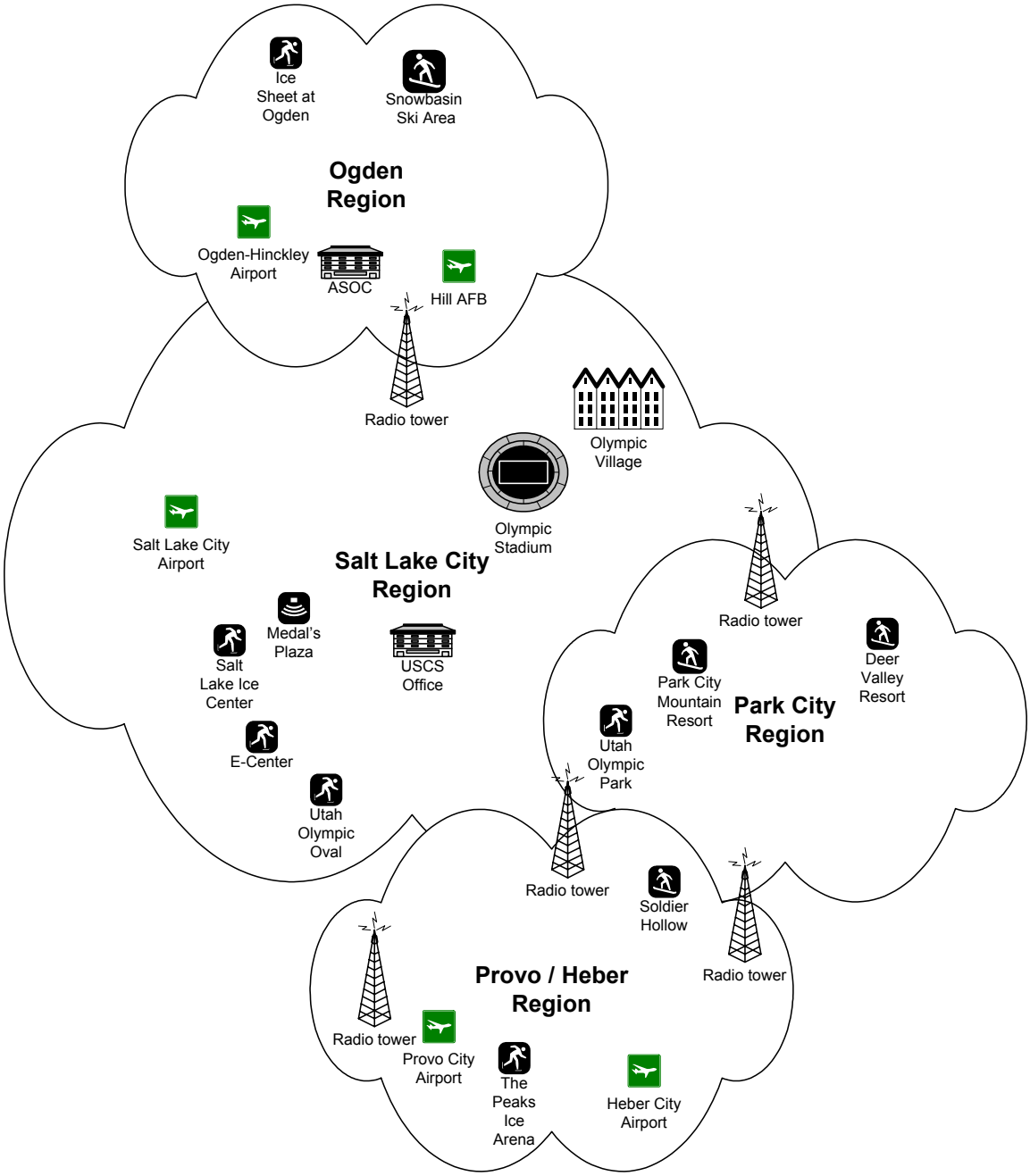

Figure 5
Salt Lake City USCS System

Command and control was located at the ASOC and the USCS Office. The local USCS network could interoperate with the ITN through a patch at the NLECC. This patch allowed all USCS personnel to use the interoperability and coverage provided by the ITN. At the conclusion of the Games, the USCS system was scaled down to meet the requirements of Customs personnel staffed in the Salt Lake City region; the patch to the NLECC stayed in place.

5.2.4 USSS Communications System

Under the UOPSC charter, USSS was the lead agency for the security planning of the 2002 Winter Olympic Games. The planning effort started three years prior to the Games, which provided ample lead-time to plan for communications needs. USSS relied primarily on its conventional LMR system for radio communications in support of its protective mission during the Games. The mission included venue support, motorcade operations, Presidential protective detail operations, counter-sniper and counterattack operations, and dignitary protection operations. To support these operational elements, USSS agents relied on the ITN system (described in Section 5.2.2) to supplement their LMR system. For instance, USSS used the ITN OTAR channel to distribute encryption keys to all USSS agents. In addition, USSS agents permanently assigned in Salt Lake City used the ITN system for their operational needs.

The LMR system that USSS operated in Salt Lake City was a VHF, digital, encrypted, narrowband, conventional system. Its radio sites were strategically located throughout the greater Salt Lake City region to maximize coverage. Significant radio infrastructure resources were deployed to the field to meet the surge in radio communications. However, at the conclusion of the Games, the USSS resources were scaled down to meet the requirements of USSS agents staffed in the Salt Lake City region; thus, making available communications assets for redeployment to future venues of similar size and capacity.

Figure 6 depicts the USSS LMR system. It was composed of 10 radio sites located in the Salt Lake City region, 5 sites in the Park City region, 4 sites in the Provo region, and 5 sites in the Ogden region. These radio sites were linked to three radio hubs at the USSS Coordinating Center, Transportation Operation Center, and Bomb Management Center, all located in Salt Lake City. Dispatch consoles were available for quick local dispatch and incident response. These dispatch consoles were located at the USSS Coordinating Center, MED Planning Center, Transportation Operation Center, and Bomb Management Center. The system was capable of patching to the ITN and USCS systems through the NLECC.

USSS used 17 encrypted radio channels that provided radio coverage for the Olympic region, including all Olympic venues and major transportation routes between venues. All of these channels were used in support of venue security, USSS operations, DOJ and Treasury interoperability, and the Department of State's diplomatic security detail. Among these 17 channels, one was the ITN channel used for OTAR. In addition, USSS provided two simplex channels for DOJ and Treasury interoperability. USSS planners, guided by operational requirements, created the following channel assignments:

- Four channels, Baker, Charlie, Mike, and USSS-11, were used primarily for venue perimeter security.
- USSS-13 was used as a secondary venue perimeter security channel.

- Three channels, USSS-9, 11, and 12, were used for various wide area operations throughout the greater Salt Lake City metropolitan area.

- Motorcade channels 1 and 2 were used for protection communications along major routes between venues.

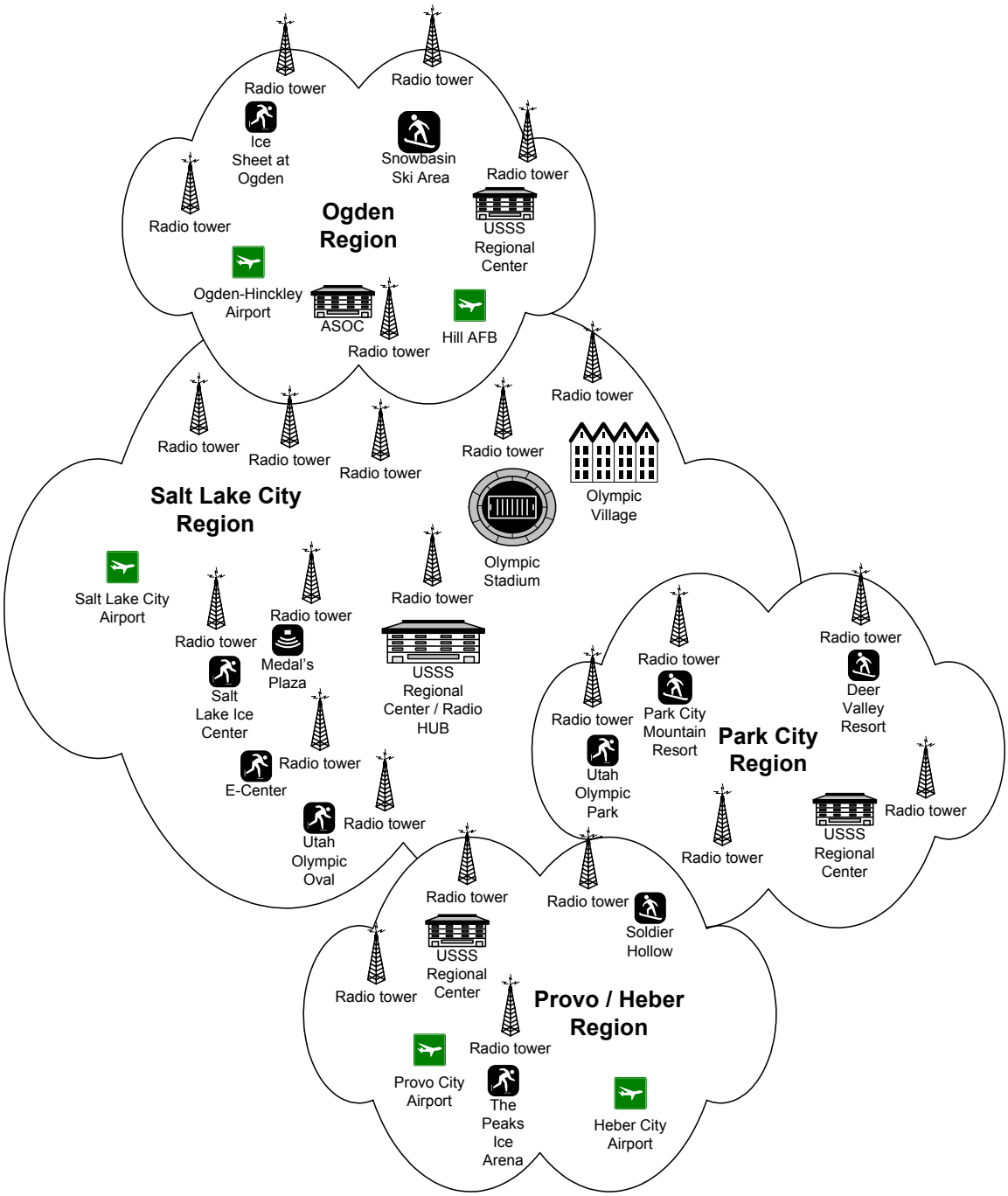

Figure 6
Salt Lake City USSS System

- Motorcade channel 3, which was originally intended for motorcade operations, was instead used to provide radio coverage at the Snowbasin venue. A repeater operating on Motorcade channel 3 was added to provide handheld coverage for USSS perimeter security at Snowbasin.

- USSS-10 was provided for use by Department of State diplomatic security. The channel provided wide area radio coverage, including all venues and major routes in between.

- Tango and Oscar were the nationwide analog secure channels used by USSS.

- The Helo channel (an unencrypted channel) was designated primary as the helicopter air-to-ground radio channel. Helo radio equipment was deployed at all venue Security Command Centers (SCC), ACCs, and Special Management Centers. The channel was also used as a general backup channel for all law enforcement activities.

USSS experienced some difficulty using the OTAR channel early in the Games. The difficulty was attributed to the key management challenges of a rapid surge of users in the days leading to the Games. There was also an incident of a lost radio, which prompted the USSS, using the OTAR channel, to conduct a wide-scale rekeying operation during the Games.

Infrastructure redundancy was established for the LMR system, including backbone connectivity and communications and command center facilities to ensure backup was available in the event of system failure or sabotage. In addition, detailed procedures were developed, as part of the USSS communications plan, to provide users with clear steps for switching to alternative communications means in the event of a system failure.

5.2.5 Utah Communications Agency Network

Planning for UCAN started in 1993, and in 1995, SLOC approached UCAN to support the 2002 Winter Olympic Games. UCAN provides communications to more than 90 government agencies, allowing local, state, and federal agencies to interoperate. During the Games, the UCAN system manager provided radios for all SLOC personnel who required a radio. Many visiting public safety agencies from around the country were also given UCAN radios to help support the Games.

The UCAN system is configured with an 800 MHz, digital, narrowband, trunked radio system. Site locations were strategically chosen to provide optimum coverage without interference. These sites would stay in place to continue supporting UCAN subscribers after the Games had drawn to an end. UCAN representatives were participants on several planning committees, helping to coordinate frequency allocation and interference issues. Information gathered from the planning committees helped guide UCAN toward a system design appropriate for supporting the increased volume during the Games; between February 4 and February 20, UCAN processed 8.5 millions calls. Figure 7 depicts the UCAN system's key subsystems, which include a total of 41 repeaters in the Olympic region.

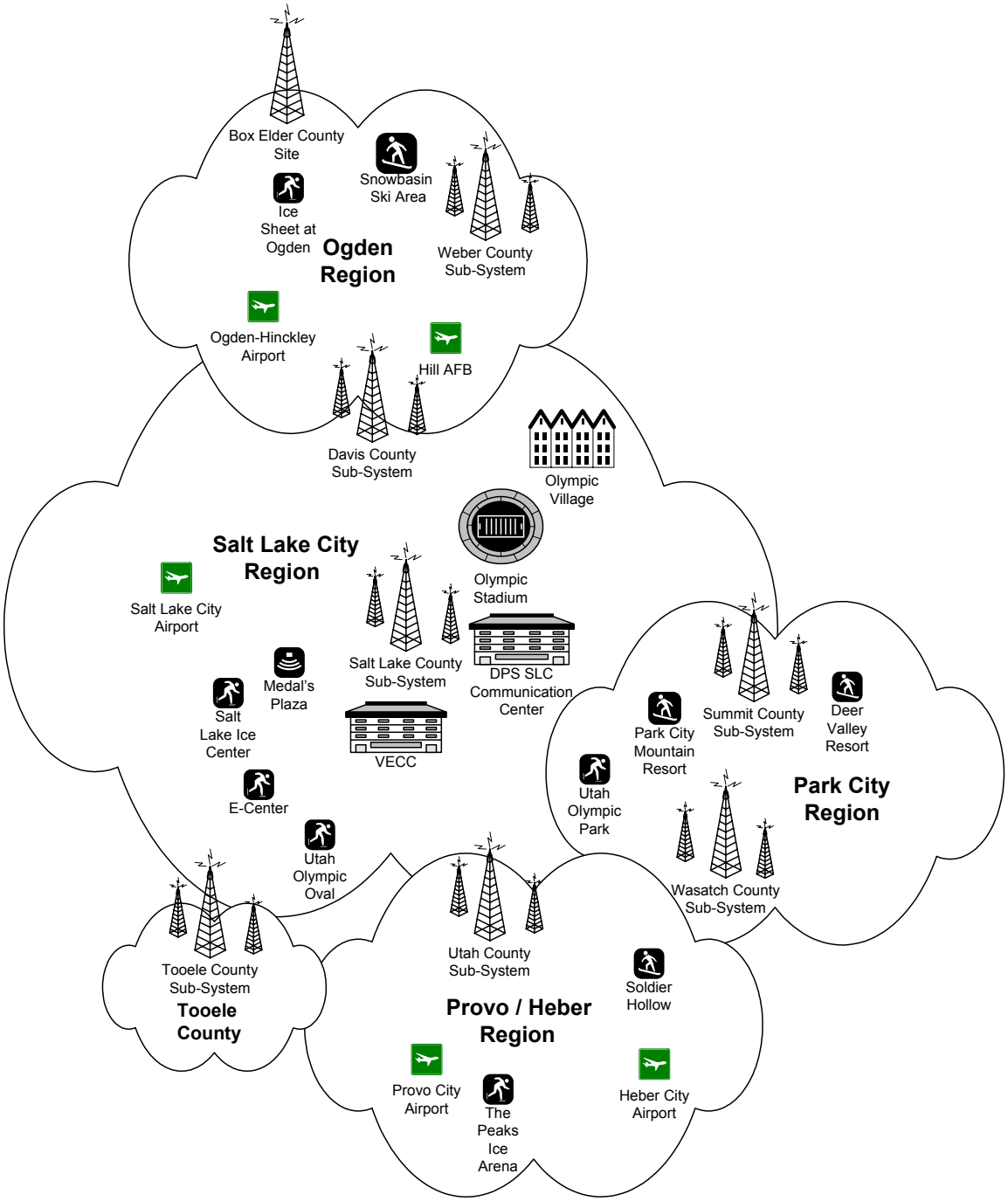

Figure 7
A Depiction of the UCAN System Within the Olympic Region

Both the Valley Emergency Communications Center (VECC) and the Department of Public Safety (DPS) Communications Center provide dispatch operations for many subscribers to the UCAN system.

VECC is a Public Safety Answering Point, receiving emergency and non-emergency calls for public safety assistance. VECC dispatches for 10 fire and EMS agencies and nine law enforcement agencies, using the UCAN system and the VECC computer aided dispatch (CAD) system. VECC dispatchers staffed radio consoles at the E-Center, Olympic Oval, Murray Ice Sheet, and at the practice sites for the competing athletes, and provided law enforcement and EMS dispatching for those locations.

DPS, along with its regional Salt Lake City Communications Center (SLCC) dispatch service, migrated from its own system onto the UCAN system. The SLCC is one of six regional communications centers staffed and operated by DPS. From its facility in Salt Lake City, SLCC performs LMR dispatching and CAD communications support for the agencies of the DPS and other state agencies. Although all primary radio communications are now conducted over the UCAN system in the 800 MHz band, SLCC maintains its participation and support for the statewide DPS network, which operates in the VHF band, and monitors the statewide mutual aid frequency for traffic affecting its region.

Users on UCAN can interoperate with users on the JWN and the SLCSO system through the CSI solution discussed in Section 5.3.2. A patch at the VECC connects the UCAN system with the JWN and the SLCSO system. UCAN users not dispatched at the VECC can contact their dispatch center to link with the VECC to establish a patch with the JWN or SLCSO system. During the Games, the VECC dispatchers frequently established patches connecting UCAN users with SLCSO users but did not receive requests to set up patches with personnel operating on the JWN system.

The UCAN system administrators provided talk group management throughout the Games. System busies were common during the Olympic opening ceremonies, and system administrators had to shift non-critical talk groups to eliminate future system busies. Moving off-site talk groups was critical to reducing network traffic during peak hours.

5.2.6 Salt Lake County System

As a member of UOPSC, SLCSO actively participated in the planning of radio resources in support of the Games. SLCSO relied primarily on its own 800 MHz digital trunked system for radio communications during the Games. The Salt Lake City Police Department (SLCPD) operated on the same system. The primary mission of SLCSO was to safeguard the Utah Olympic Oval and to provide law enforcement protection to the Oval's surrounding areas under the jurisdiction of SLCSO.

SLCSO's 800 MHz system, shown in Figure 8, is a Motorola SmartZone trunked system that includes a 4-site simulcast subsystem and five intelliRepeater (IR) sites, all linking back to the trunked master control site located at SLCSO's Criminal Justice Administrative Building. A majority of the backbone connectivity is accomplished by point-to-point microwave, with the remaining connectivity achieved using leased commercial T1 lines. The simulcast subsystem had eight channels installed to accommodate the needed capacity during the Games. The total number of channels installed at the five IR sites ranged from 3 to 10 depending on the amount of radio usage in a particular coverage area. The SLCSO system supported SLCSO and SLCPD

personnel before the Olympic Games and remained in place to support its users after the Olympic Games had drawn to an end.

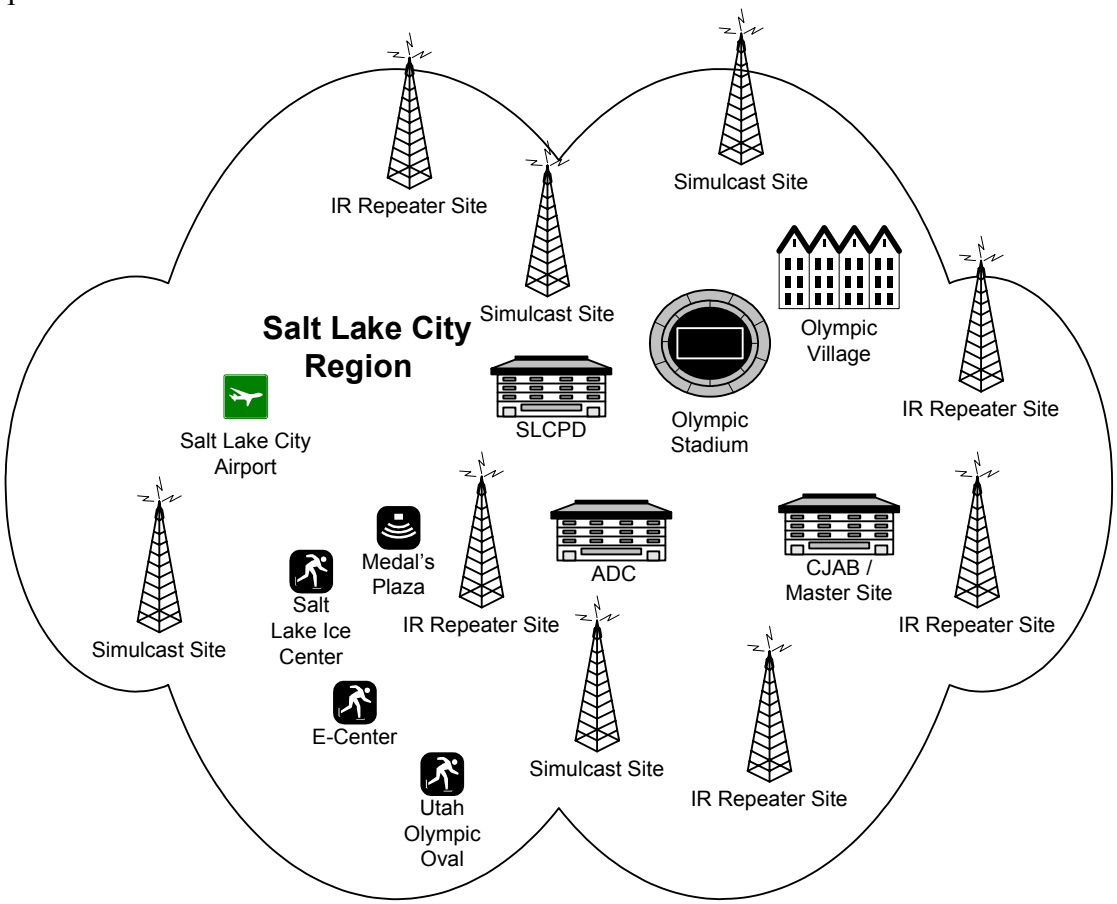

Figure 8
Salt Lake County Sheriff's Office System

SLCSO initially planned to operate using analog-based radios provided by DoD at the Olympic Oval and to use its 800 MHz system as a backup. These radios were configured to utilize the JPS ACU-1000 interoperability radio system set up by USSS (see Section 5.3.1.6). However, in the days leading to the Games, SLCSO discovered that the DoD radios operating on the JPS radio system did not provide the clear audio quality needed. While communicating with users in secure digital mode, the audio quality of the DoD secure analog radios suffer because the audio signal must complete a process of un-encryption and re-encryption into the digital format, prior to communication. The officers also experienced additional delay and audio cut-off when accessing the system. SLCSO decided to operate on its own 800 MHz system instead. Because the 800 MHz system had radio coverage throughout the Olympic Oval, radio communication was adequate under the increased system loading experienced during the Games.

Users on the SLCSO system can interoperate with JWN and UCAN users through the CSI solution discussed in Section 5.3.2. In addition, many SLCSO system radios were programmed to operate on the UCAN system by simply switching talk groups on their assigned radio. If a SLCSO system user switches his/her radio to the UCAN system, the user loses

contact with a SLCSO dispatcher, inhibiting transfer of mission-critical information from the dispatcher to the user. If a SLCSO system user contacts a SLCSO dispatcher to set up a patch through the CSI, the user stays in contact with the dispatcher while connected to the UCAN system. However, two channels are required to establish such communications; thus, lessening the efficiency of the two systems. SLCSO system dispatchers frequently set up patches with UCAN system users during the Games; SLCPD requested many patches with users on the UCAN system. However, SLCSO system dispatchers did not receive requests for communications with JWN users, and a patch was never set up during the Games.

To ensure continuity of operation and communications in the event of system failure or sabotage, SLCSO established a well-structured contingency plan for alternative means of communications. If its own 800 MHz SmartZone trunked system failed, SLCSO would switch to its legacy 800 MHz SmartNet system. If the SmartNet failed, SLCSO would switch to the 800 MHz SmartNet system operated by the airport authority. If that failed, SLCSO would operate on the UCAN system. If the UCAN system failed, SLCSO would use cellular telephones and pagers to communicate.

Although the overall operation was a success, SLCSO noted there was a lack of training for its radio users. Many patrol officers did not know how to use the radios effectively. They were accustomed to their old habit of calling the dispatch operator when they needed to talk to an outside agency instead of just switching to another talk group on their radios.

5.3 Interoperability Solutions

To support interagency communications during the Games, several interoperability systems were implemented and deployed at Olympic venues theater-wide. Venue-specific systems included the use of JPS switches, landlines, satellite telephones, and secure FAX to help tie different public safety agencies and their communications systems together while supporting operations. The CSI was implemented to help connect disparate wide-area communications networks present in the Olympic region. Finally, the Naval Research Laboratory (NRL) unit (see Section 5.3.4) and the FIST were available for as temporary interoperability solutions in remote or unique locations.

5.3.1 In-Venue Interoperability

In-venue interoperability was accomplished through a combination of many different communication services. JPS switches, landlines, and satellite telephones provided the needed links for agency interoperability between venues. The JPS switches connected agencies' disparate LMR systems while satellite telephones provided a link to personnel in remote locations needing extended coverage. Many day-to-day operations were handled via landline telephone calls.

5.3.1.1 JPS Communications Devices

Under UOPSC, USSS led the security planning effort for the inside the venues. To achieve interoperability between local, state, and federal law enforcement agencies operating in the venues, USSS implemented the JPS ACU-1000 interoperability solution at each venue.

These interoperability units were taken down at the conclusion of the Games. Figure 9 shows where the JPS units were implemented.

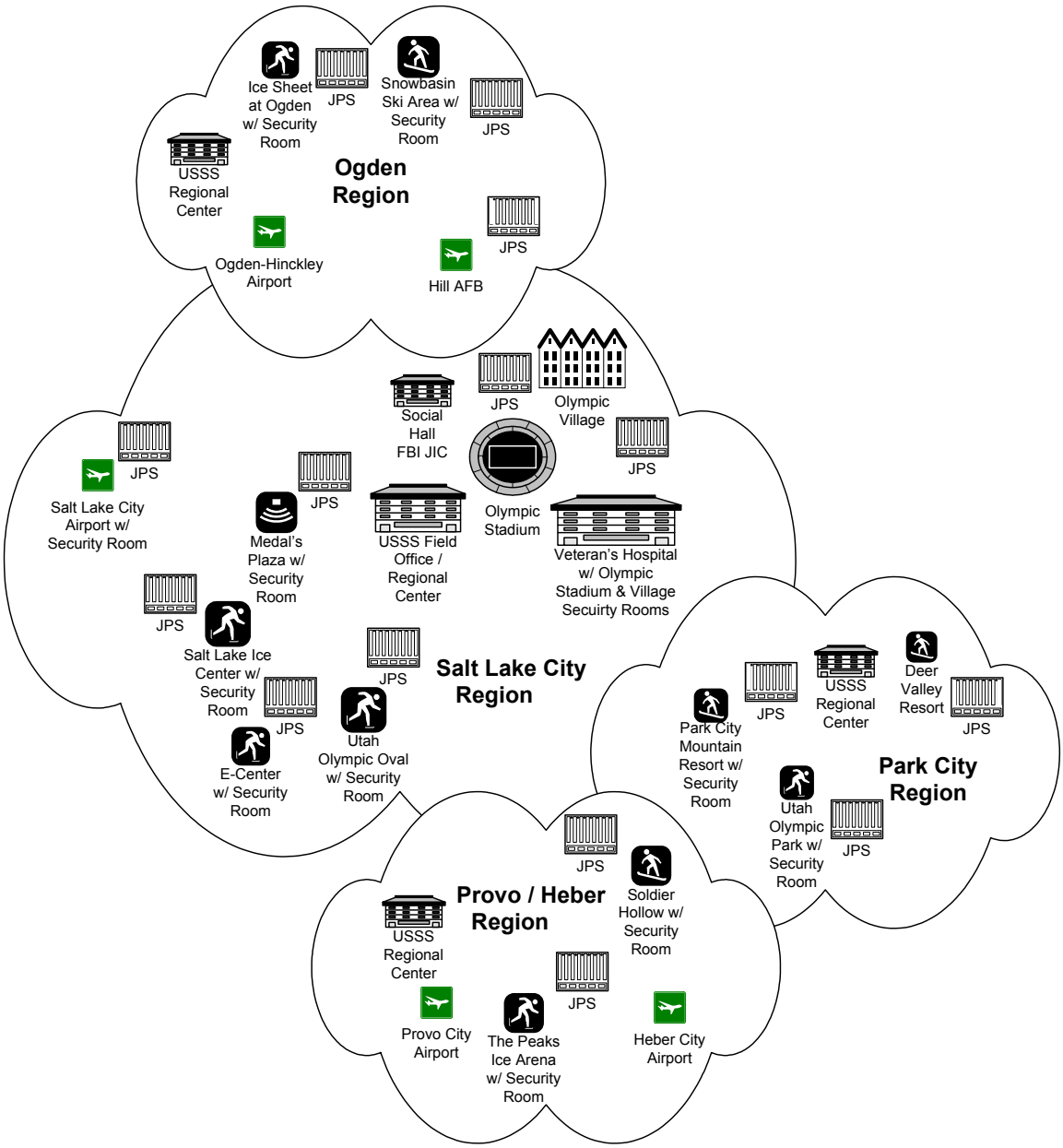

Figure 9
JPS System Olympic Theater Locations

The JPS ACU-1000 is an audio switch that establishes audio connectivity between different radios used by the participating public safety agencies. The underlying principle of the JPS ACU-1000 solution is that the audio output of a radio is linked to another radio through a computer-controlled audio switch, thereby achieving interoperability between the two radios regardless of their operating frequency band and make. Each JPS unit was installed with the intent to provide the following communications capabilities:

- Radio frequency (RF) link to the ACC for local, state, and federal venue perimeter security

- RF link to the ACC for special teams (bomb/SWAT)

- Access to local, state, and federal tactical channels

- Access to HAM channel as a backup during emergencies.

Agencies or entities that planned to communicate with other agencies at the venues were required to provide their radios to the UOPSC to be used with the JPS switch. DOJ, DoD, UCAN, and voluntary HAM operators all provided the necessary radios to establish the interconnect between the participating agencies. The voluntary HAM operators belonged to the Radio Amateur Civil Emergency Services. These volunteers were prescreened to assure their backgrounds were clear and that they were otherwise qualified to provide aid during an emergency by facilitating and conducting communications using their radios, which were ready to be linked to the JPS ACU-1000 should the existing communications systems suffer a catastrophic failure.

The JPS ACU-1000 functioned correctly, but poor operational planning resulted in a number of challenges during the Games including the following:

- Although DOJ provided radios for use with the JPS switch, they did not have detailed information on which other agencies were also linked to the JPS switches. There were no JPS units deployed with fleet maps to allow participating agencies to know what was programmed into the units and what changes were available for configuring the units. When DOJ technical staff experienced interference on the channels assigned for JPS use, they decided to turn off all DOJ radios intended for use by the JPS switches, with the intent of minimizing any interference that could adversely affect the JWN system.

- UCAN also provided radios for use by the JPS switches. However, the technical staff at UCAN did not have detailed knowledge on how the UCAN radios were connected to the JPS switches at the venues.

- DoD also tied into the ACU-1000 interoperability solution. Because of the surge anticipated in the number of radio users during Games, the UOPSC requested DoD assistance in providing additional radios to be distributed to public safety agencies. The special-events radio cache and engineering staff from the Defense Information Systems Agency were mobilized to support interagency communications. The DoD radios were Motorola Sabre analog radios, which in many ways operated differently from the radios the local public safety users were accustomed to using. In addition, the encryption scheme of the DoD analog radios was incompatible with that of the USSS Motorola XTS-3000 radios, which caused some difficulty in communicating in secure mode between DoD radios USSS radios. When these difficulties were

encountered, one venue commander responded to the frustration by canceling all encryption for that location. All radios were also programmed to operate in the clear.

5.3.1.2 Landline Equipment

USSS deployed landline equipment in support of communications needs at each SCC. A typical SCC contained a telephone system that was supported by 4 to 8 trunked telephone lines. Four dedicated data lines were used to support FAX and data communications. Additional single line telephones were also available at each venue. Large venues, such as the Olympic Village and Downtown Command Center, were equipped with a large telephone switch system supporting more trunked lines. USSS worked with QWest to implement the landline equipment at the SCCs.

5.3.1.3 Satellite Radios

The U.S. Forestry Service provided 26 GlobalStar satellite telephones to support continual communications during a massive catastrophic terrestrial communications failure; sets of two were deployed at each venue. In addition, thirty handheld Qualcomm units were used by USSS in support of its internal operations. One desktop Qualcomm unit was dedicated for helicopter operations, and another desktop unit was installed at Olympic Coordinating Center. Additional desktop units were kept in reserve as backup.

5.3.2 Cross-System Interconnect

The PSWN Program, along with the Salt Lake City Coordinating Working Group (CWG)–UCAN, SLCSO, SLCPD, and DOJ developed an interoperability solution to allow communication among the three main radio systems—the UCAN system, the JWN system, and the SLCSO system. This solution is called the CSI. Planning for the CSI interoperability solution started two years before the Games. Although the Salt Lake City interoperability solution was not developed exclusively for public safety use at the 2002 Winter Olympic Games, the timing of the Games guided the PSWN CWG toward the CSI solution because it was more feasible to implement and have operational by the start of the Games than other alternatives. The CSI solution remained intact at the conclusion of the Games.

All three agencies manage their systems through Motorola CentraCom consoles, which allows the consoles to become an integral part of the immediate and inexpensive interoperability solution. The interoperability concept is based on cross-connecting the agencies' consoles at strategic locations using base interface module (BIM)-to-BIM circuits in central electronics banks (CEB). Each agency-to-agency link consists of three patches—one for primary use, one for secondary use, and a third as a backup or for emergency situations.

The BIM-to-BIM patches are linked through two existing microwave networks—the Utah Information Technology Service (ITS) Microwave Network and SLCSO Microwave Network. Figure 10 illustrates how the CSI was configured.

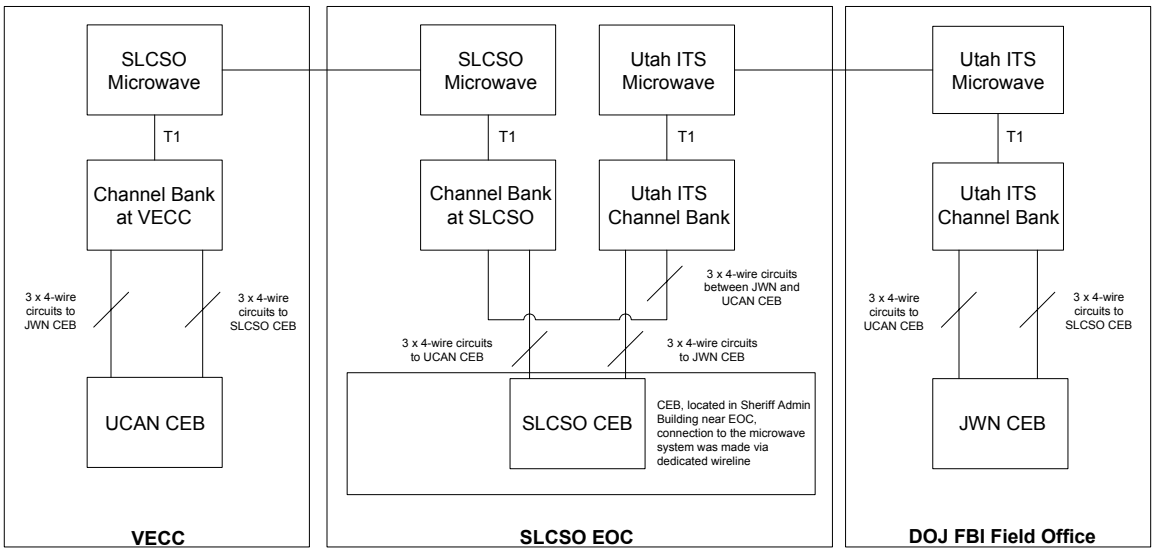

Figure 10
Salt Lake City CSI Configuration Block Diagram

In fall 2001, the CSI interoperability solution was tested to ensure that radio-to-radio over-the-air communications across multiple agencies could be accomplished. The test plan addressed operator control, link functionality, and voice quality. After minor reconfigurations, the CSI passed all tests.

Trained dispatch operators are critical for establishing the BIM-to-BIM patches. The PSWN Program realized this and properly trained the operators prior to the fall 2001 CSI test. Appendix B outlines how a multiple system patch would be set up, and highlights the dispatch operator's key role; Figure B-1, located in Appendix B, is a graphical representation of the component connections made during a multiple system patch.

During the Games, there were several instances when users on the UCAN system needed to communicate with users on the SLCSO system and the CSI facilitated the request. One such instance occurred when the Highway Patrol's Horse Patrol needed to contact SLCPD. The Highway Patrol operated on the UCAN system and was dispatched through DPS. SLCPD operated on the SLCSO system and was dispatched at the Emergency Operations Center (EOC). Because both agencies subscribed to networks interfaced in the CSI, the dispatch operators were able to contact the appropriate dispatch centers to establish the necessary patch; the DPS dispatch center had to contact the VECC dispatch center to initiate the patch with the EOC.

The fall 2001 test ensured the CSI solution would provide reliable communications during the Games. VECC, UCAN, DPS, and SLCSO all considered the CSI solution to be a success and valued its contribution to agency collaboration across disparate communication systems. DOJ recognized that the CSI solution was a good concept but did not use it during the Games because when DOJ personnel tried a test-patch, they were not successful.

5.3.3 Secure Two-Way Paging

Treasury recognized a need for secure, two-way paging within departmental offices, as well as within the Treasury Law Enforcement/Public Safety bureaus. The PSWN Program helped the Treasury Wireless Programs Office (WPO) develop a secure two-way paging pilot to run during the 2002 Winter Olympic Games. Pagers were given to the FBI, Treasury's WPO, UCAN, DPS, SLCSO, USSS, USCS, and Federal Law Enforcement Training Center personnel to be used for information sharing and backup communications during the Olympic Games.

The secure two-way paging network configuration is illustrated in Figure 11. As shown in the figure, a two-way pager, assigned a Personal Identification Number (PIN), transmits secure text via a radio tower to the paging carrier's Network Operations Center (NOC). At the NOC, the message is routed through the carrier's firewall over the Internet to the Treasury Communications System (TCS). TCS receives the message at the firewall and authenticates the PIN number. After the PIN has been identified, the authentication server resends the secure message through the firewall via the Internet and through the carrier's NOC. The message is then transmitted to a radio tower and the second secure two-way pager. The second client then decodes the message for viewing by the recipient.

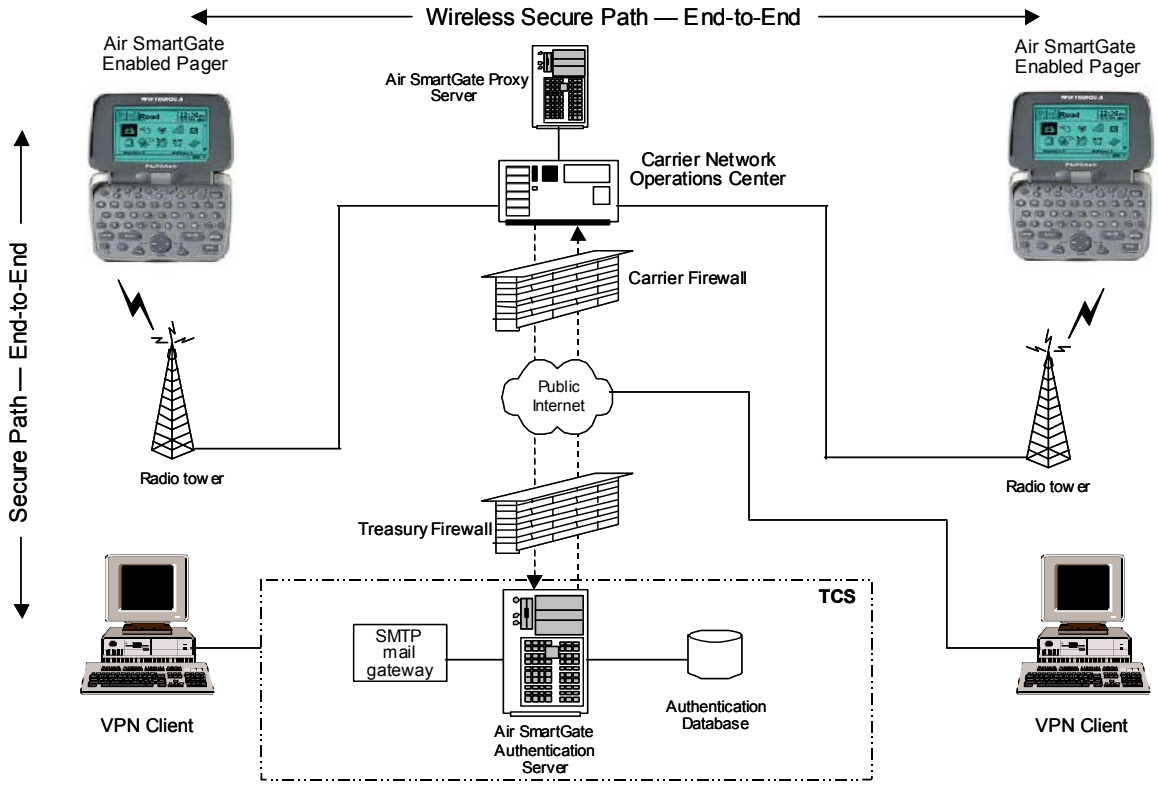

Figure 11
Secure Two-Way Paging Operational Diagram

Also shown in the Figure 11 are the interconnections and transmission paths of a message sent from personal computer virtual private network clients (both within the TCS and outside the TCS) to secure pagers. In both of these instances, the message is encrypted at the Air SmartGate server and sent to the authenticated pager via the Internet, across the Treasury and NOC firewalls. The encrypted message is then transmitted from the service provider infrastructure to be received by the pager. The Air SmartPass Client (V-Client software) resident on the two-way pager then decrypts the message for viewing.

Those who participated in the secure two-way paging pilot enjoyed secure messaging throughout the Olympic region. Although overall agency review of the pilot was positive, some agencies noted that their personnel preferred smaller pagers and viewed the two-way pager as another accessory to lug around. Some agencies reported a lack of training on the pagers for their personnel. Those users with a lack of training often reverted to using their old pagers and did not make use of the new secure two-way pagers to complete their assignments. Some agencies were not given many pagers and therefore could not use the pagers to pass information to all appropriate users. Because of the lack of training and a lack of pagers, some agency personnel did not use the pagers that were given to them.

5.3.4 Deployable Communications

NRL and DOJ each stationed a deployable interoperable communication system in the Olympic region during the Games. NRL provided a High Mobility Multipurpose Wheeled Vehicle (Humvee) containing communication links consisting of several commercial off-the-shelf products including a JPS Communications ACU-1000, LMRs, and a self-contained cellular telephone system. Also, DOJ placed its FIST, which consists of a JPS Communications ACU-1000 and LMRs, on reserve at the Games. Each deployable interoperability communications system was built to link disparate radio systems, facilitating public safety incident response through agency interoperability during the first 24 to 48 hours of an emergency situation.

Although the FIST was never deployed during the Games, the NRL unit was dispatched to the scene of a suspicious package in Park City. Many agencies from multiple levels of government were involved in the Park City incident. The NRL unit, sent to Utah as a last-minute addition to interoperable communications devices, had been held in reserve prior to this event. The Explosive Ordinance Team was not able to communicate with the Park City Police department until the NRL unit was deployed to provide the communications bridge between the two agencies' disparate radio systems. UCAN and DoD radios were brought to the scene and were reprogrammed into the NRL unit, allowing extra users access to the interoperability solution. Several challenges were encountered with the NRL unit; including radios that were not programmed correctly and that did not have the right interface cables.

Both the FIST and the NRL unit employ an interoperability system similar to that of the generic deployable communications unit described below. Figure 12 depicts a conceptual drawing of a generic deployable communications unit.

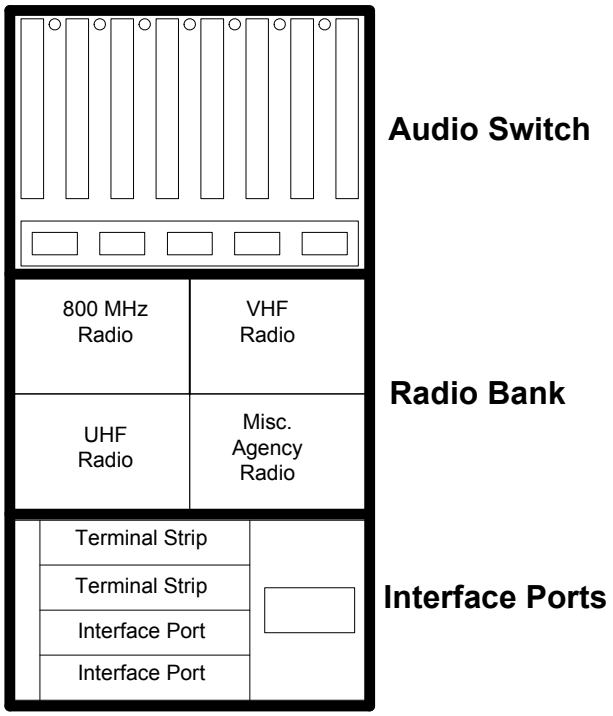

Figure 12
Generic Deployable Interoperability Unit Conceptual Drawing

A deployable communications unit consists of three basic building blocks: radios to interconnect, an audio switch (i.e. ACU-1000 switch) to provide the interconnections, and interface hardware (e.g., custom cables and terminal strips) to provide the physical connectivity supporting system operation.

5.4 Commercial Services

Commercial services were used throughout the 2002 Winter Olympic Games. Local, state, and federal public safety personnel leveraged commercial services, including Nextel radios, AT&T cellular telephones, one-way paging devices, and cellular digital packet data (CDPD) services to supplement their LMR systems.

Nextel radios use Motorola's Integrated Dispatch Enhanced Network (iDEN) technology. The iDEN technology enables Nextel to offer cellular telephone service, private and group dispatch, and alphanumeric text messaging thorough one handset. During the Games, Nextel provided approximately 2,000 i55 Bumble Bee radios (a ruggedized radio with a large battery for extended use), free of charge, for use by public safety agencies. These Nextel radios were distributed to many local, state, and federal agencies to supplement their primary LMRs. Because the Nextel radios had no encryption capability, the recipients were instructed not to relay sensitive information through these devices. In addition to the free Nextel radios, individual agencies also used their agency-owned Nextel radios during the Games.

Agencies who used Nextel radios reported good coverage in and around all Olympic venues, as well as throughout the Salt Lake valley and major interstate highways. No major problems were found in using the Nextel radios. However, communication between the Nextel radios and the private LMR systems was not feasible. This created limited interoperability between users on the Nextel system and others relying on their agency LMR system.

In addition, public safety agencies used their agency-procured cellular telephones to communicate during the Games. Because AT&T was the official sponsor for the 2002 Winter Olympic Games, AT&T cellular telephones were heavily marketed at the Games. USSS deployed 250 AT&T cellular telephones for use by its agents. VECC also used AT&T cellular telephones to communicate.

USSS deployed Skytel one-way pagers to a majority of its personnel involved with the Games. The pagers were used widely during the Games because they were easy to operate and small in size.

Finally, SLCSO used its private mobile data system for database retrieval and mobile data terminal messaging. Having access to wireless data services substantially cut down required dispatch traffic and allowed speedy retrieval of criminal records. VECC used the AT&T CDPD network to provide wireless data services to support its public safety agencies. During the Games, a significant amount of information was sent out through the CDPD network to its subscribers from the dispatch center. VECC's data system had 4,000 mobile data computers linked to the CDPD network.

6. LESSONS LEARNED

As a result of interviews, data collection, and analysis, the PSWN Program identified a list of lessons learned that would facilitate reliable public safety communications for agencies supporting large operations in the future. These lessons learned were based on the experiences of personnel involved in the 2002 Winter Olympic and Para-Olympic Games and highlight the complexity of planning for the different communications requirements of each agency.

The lessons learned are organized into the following categories:

- Operational Planning
- Training
- Spectrum Management
- LMR System Planning
- Interoperability Solutions
- Secure Paging
- Commercial Services.

6.1 Operational Planning

- A central coordinating committee should be established to help agencies work together in large multi-agency operations. The UOPSC allowed key Olympic public safety participants to work side-by-side to resolve many operational and technical issues prior to the Games.

- Local, state, and federal agencies should be proactive in developing agreements and procedures for reliable communications for all public safety agencies. During the Games, agencies worked well together because politics were set aside and cooperation facilitated resource sharing (i.e., frequency and equipment), helping public safety wireless system users meet their communication requirements. Agencies from all levels of government actively participated in all related communication planning events.

- An ICS should be established to facilitate the command and control structure allowing public safety agencies to respond to an emergency. An incident command and control structure was well planned and established for the public safety agencies supporting the Games. Strict adherence to the ICS proved to be critical during the Games. Although no major incident occurred during the Games, the participating agencies believe implementing the ICS in multiple agency operations enhanced interoperability.

- Dispatch centers should be staffed appropriately during major events. During the Games, many consoles were set up throughout the Olympic region. Unfortunately, some of the consoles were not staffed appropriately due to limited resources and training.

- Well-planned contingency procedures should be developed and backup systems should be deployed to mitigate the possibility of a system failure. Well-defined communication contingency plans would clearly guide public safety personnel in the event of a communication crisis.

- Standardized radio call signs should be established to help resource management in emergency situations. Use of standardized call signs would help the needed radio resources to be recognized easily among many users on the various interoperable communications networks.

6.2 Training

- Planning agencies should include dispatch centers in emergency response drills. Dispatch centers should play an active role in communication planning for emergency response drills because they provide a unique perspective on resource management.

- Routine radio training should be established to provide users with information on the full capabilities of their radios. A radio user's lack of knowledge may prevent him/her from carrying out a mission-critical task.

- Training local and state law enforcement agencies in the use of encrypted radios should help interoperability with federal agencies in large operations.

6.3 Spectrum Management

- During the Games, there was a need for nationwide interoperability channels to foster communication between the participant agencies. Although these channels have been identified, they can not be used until all Federal Government land mobile operations have transitioned to the National Telecommunications and Information Administration's (NTIA) mandated narrowband frequencies.

- A nationwide air-to-ground radio channel should be considered. This channel should be able to be programmed readily into helicopter and ground support equipment and be accessible to public safety agencies.

- A special event spectrum manager should be designated to prevent resource mis-allocation. A special-event spectrum manager could research all event-related spectrum issues and could advise all participating public safety agencies.

6.4 LMR System Planning

- Implementing a shared network infrastructure should be considered to enhance reliability and interoperability between agencies within the system. Cost savings can be realized by using shared antenna systems and bundled backbone connectivity. Because subscriber units are a major component of the overall system cost, substantial savings could be achieved through volume discounts associated with a consolidated purchase.

- Talk group management should be established to reduce network traffic during peak hours. System dispatch operators must plan for moving non-critical communications onto secondary talk groups to free up the network for mission-critical communications.

- System planners should fully understand capacity planning. A knowledgeable system planner should be able to help in "right sizing" an LMR system so that it meets the user demands but also ensure that it is not overbuilt. A better understanding of radio traffic patterns should help system planners to "right size" the system. During the Games, radio traffic on conventional systems was not spread evenly across all channels, despite prior detailed fleet map and talk group planning. In high user density areas, manually coordinating radio traffic to balance system loading was found to be impractical. Instead, a trunked system should be considered as a better solution to handle radio usage in large metropolitan areas. In addition, capacity planners should consider the airtime of console operators because they also contribute a substantial amount of radio traffic.

- System planners should define a standard set of features that would be programmed into all radios operating on the system prior to system deployment. Doing so would prevent last-minute changes, which could lead to radios with disparate features, making troubleshooting more difficult.

- Remote diagnostics should be implemented at all LMR sites. Remote diagnostics proved to be an invaluable tool for field technicians to quickly diagnose technical problems at a radio site without the need to visit the site.

- System planners should account for different encryption schemes that could be incompatible. Encryption schemes on the legacy analog radios are incompatible with the ones on the digital narrowband radios. In addition, legacy analog radios experience severe voice quality degradation because analog systems lose coverage while operating in secure mode.

- Users new to a radio must be provided with knowledge about the functionality of their radio. A lack of training made some radio users unhappy with their equipment. Because older radios do not provide the same functions as new radios, users new to these radios must be made aware of the differences.

6.5 Interoperability Solutions

- CSI users and dispatch operators should be trained well before the solution is used for public safety support. User and dispatch operator awareness was key to the establishment of BIM-to-BIM patches. Dispatch operators should be re-trained on a consistent basis to ensure the reliability of the patch. Trained field users would be more likely to initiate a system-to-system patch increasing agency-to-agency interoperability.

- Planning for an interoperability solution should start as soon as system interoperability requirements are known. Ample time and appropriate planning committee members were required to resolve technical and operational issues involved with agency-to-agency collaboration. The planning committee should regularly monitor the progress of the project to ensure interoperability needs are met.

- To mitigate operational challenges, the JPS ACU-1000 units should be tested rigorously against all conceivable operational and logistical scenarios to ensure a successful completion of the planning stage. The JPS ACU-1000 interoperability solution functioned correctly, but poor operational planning resulted in several challenges for the user community. In addition, well-documented training materials should be distributed to field personnel using the units.

- Interoperability solutions deployed for a one-time event should be considered part of the LMR system design and included in the system acceptance testing. Doing so would provide system planners ample time to test and refine the proposed interoperability solution and to develop ways to incorporate the solution into the system effectively.

- As part of the planning for different interoperability scenarios, system planners should consider deployable communications units. The units must be configured to interface with radios of all makes and models. The NRL unit worked well during the Park City incident, but time was lost in programming new radios because there were no cables to link the existing radios to the unit provided by NRL.

6.6 Secure Paging

- Training on secure two-way pagers should be available and mandatory. Users need to be trained on how to send messages in both encrypted and clear modes. A basic understanding of the secure two-way pager would make the user more likely to use it. Untrained users were more likely to revert to their old habits, setting aside the new technology solution.

- Public safety teams using secure two-way pagers must provide them to all team members. Teams are less likely to send information over the two-way pagers if all team members cannot receive the message.

- Individual agencies should provide personnel to support the secure two-way paging network with equipment accountability, user support, and a point of contact for

vendors. In addition, they could serve as "help-desk" support for users with hardware or software problems.

6.7 Commercial Services

- Commercial service providers must be cooperative with public safety agencies to reduce frequency interference between the different systems. Nextel and AT&T actively participated in the Olympic frequency coordination efforts. Each company cooperated with public safety agencies to provide required coverage and capacity throughout the Olympic theater. Both companies were quick to mitigate any interference issues.

APPENDIX A–UTAH COMMUNICATIONS AGENCY NETWORK SUBSCRIBER RADIO ALLOCATION

Non-State Agencies:	South Weber City
Ace Ambulance	Springville
Bluffdale	St. Marks Hospital
Bountiful	Summit
Brigham Young University	Sunset
Centerville	Syracuse
Clearfield	Tooele
Clinton	University of Utah
Davis	Uinta
Farmington	Utah County
Gold Cross	Wasatch County
Granite District PD	Washington Terrace
Harrisville	Weber
Heber	Weber Morgan Health Dept
IHC	Weber State University
Jordan Valley Hospital	Wendover Ambulance
Kamas	West Bountiful
Kaysville	West Jordan
KSL TV	West Valley
Layton	Woods Cross
Mapleton	**State and Federal Agencies:**
Midvale	Agriculture
Morgan	Attorney General's Office
Mount Green	Bureau of Land Management
Mountain Regional Water	Department of Environmental Quality
Murray	DPS Comprehensive Emergency Management
North Fork	Department of Facilities Construction Management
North Ogden	Department of Natural Resources
North Salt Lake	Federal Aviation Administration
North View	Health—EMS
Ogden	Hill AFB
Ogden Constable	Human Service
Orem	Insurance
Park City	Motor Vehicle
Plain City	National Guard
Pleasant View	State Fire Marshall
Provo	State Insurance
Riverdale	Utah Department of Transportation
Roy	Utah Highway Patrol
Salt Lake Community College	Union Pacific Railroad
Salt Lake Regional Hospital	US Fish and Wildlife
Snydervukke	Utah Dept of Corrections
Sandy	Veteran Affairs Hospital
South Davis Fire	**Agencies In Progress:**
South Jordan	Summit
South Ogden	VECC
South Salt Lake Fire	US Department of Agriculture Forest Service

APPENDIX B–CROSS-SYSTEM INTERCONNECT MULIPLE SYSTEM PATCH SCENARIO

1. A Federal Bureau of Investigation (FBI) agent calls an FBI dispatcher over his or her radio and requests that a patch be established to the Utah Communications Agency Network (UCAN) and Salt Lake County Sheriff's Office (SLCSO) users.
2. The FBI dispatcher multi-selects the UCAN-1 and SLCO-1 channel control windows (CCW), calls each agency's dispatchers, and requests a patch be established to each of the users.
3. The dispatchers contact their personnel on their operational channel and request that they stand by for the correct communications link to be established.
4. The FBI dispatcher then places a patch between the UCAN-1, SLCO-1, and the JWN operational channel CCWs.
5. Simultaneously, the VECC dispatcher places a patch between the DOJ-1 and the UCAN operational CCWs, and the SLCSO dispatcher places a patch between the DOJ-1 and SLCO operational CCWs.
6. Each dispatcher notifies his or her personnel that the patch has been established.
7. The FBI agent calls the UCAN and SLCSO personnel, and they conduct the required communications.
8. Upon completion of the communications, the dispatchers remove the patches and return the systems to their normal configuration.

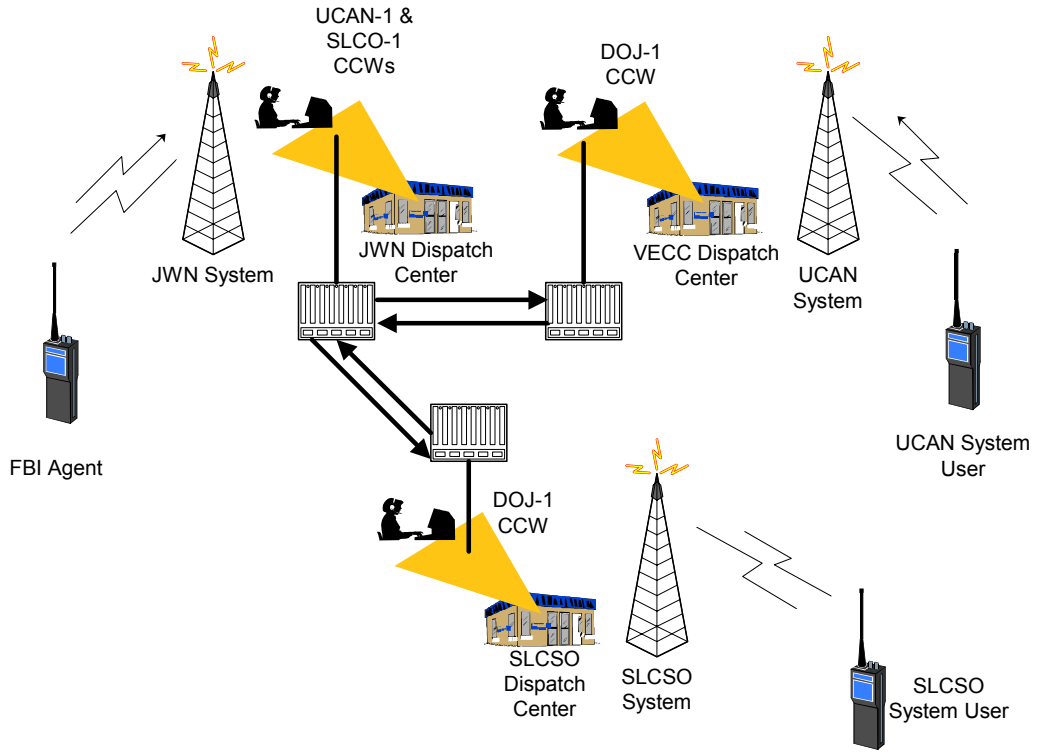

Figure B-1
Multiple System Patch Scenario

APPENDIX C–ACRONYMS

ACC	Agency Command Center
AFB	Air Force Base
ASOC	Aviation Security Operations Center
BATF	Bureau of Alcohol, Tobacco, and Firearms
BIM	Base Interface Module
BOP	Bureau of Prisons
CAD	Computer Aided Dispatch
CCW	Channel Control Window
CDPD	Cellular Digital Packet Data
CEB	Central Electronics Bank
CSI	Cross-System Interconnect
CWG	Coordinating Work Group
DEA	Drug Enforcement Agency
DoD	Department of Defense
DOJ	Department of Justice
DPS	Department of Public Safety
EOC	Emergency Operations Center
EMS	Emergency Medical Service
FBI	Federal Bureau of Investigation
FCC	Federal Communications Commission
FIST	Field Investigative Support Trailer
FTX	Federal Training Exercise
HAM	Amateur Radio
ICS	Incident Command System
iDEN	Integrated Dispatch Enhanced Network
INS	Immigration and Naturalization Service
IR	Intelli Repeater
IRS	Internal Revenue Service
ISM	Industrial, Medical, and Scientific
ITN	Integrated Treasury Network
ITS	Information Technology Service
JIC	Joint Intelligence Center
JOC	Joint Operations Center
JWN	Justice Wireless Network
LMR	Land Mobile Radio
MHz	Megahertz
NLECC	National Law Enforcement Communications Center
NOC	Network Operations Center
NRL	Naval Research Laboratory
NTIA	National Telecommunications and Information Administration
OIG	Office of Inspector General
OTAR	Over the Air Rekeying
PIN	Personal Identification Number
PSWN	Public Safety Wireless Network

RF	Radio Frequency
SCC	Security Command Center
SLCC	Salt Lake Communications Center
SLCPD	Salt Lake City Police Department
SLCSO	Salt Lake Country Sheriff's Office
SLOC	Salt Lake Organizing Committee
SWAT	Special Weapons And Tactics
T1	Digital data service at 1.544 megabits per second
TCS	Treasury Communications System
UCAN	Utah Communications Agency Network
UOPSC	Utah Olympic Public Safety Command
USCS	United States Customs Service
USMS	United States Marshals Service
USSS	United States Secret Service
VECC	Valley Emergency Communications Center
VHF	Very High Frequency
WPO	Wireless Program Office