PSWN

Public Safety Wireless Network

Transportable Communications System

A Solution for Public Safety Wireless Interoperability

June 2000

PREFACE

This report serves as a primer for one technical solution to provide interoperability among public safety wireless networks. The solution, known as the Transportable Communications System (TCS), is appropriate when certain public safety response scenarios would benefit from support by a mobile augmentation to the fixed infrastructure designed to provide interconnection among different systems. This report provides the basic, essential information needed to understand and implement the TCS and, consequently, offers a resource for all public safety agencies interested in such a solution. More information on the TCS and other means for achieving interoperability is available from the Public Safety Wireless Network (PSWN) Program, which sponsored and funded the development of the TCS concept. The PSWN Program can be contacted by email at information@pswn.gov or by phone at 1-800-565-PSWN. The program's Web site, at www.pswn.gov, provides a wealth of information regarding public safety wireless interoperability.

TABLE OF CONTENTS

Page

1. INTRODUCTION 1

2. SYSTEM COMPONENTS 3
- 2.1 19-Inch Open Relay Rack
- 2.2 JPS ACU-1000
- 2.3 Radios
- 2.4 Power Distribution Panel
- 2.5 RJ-45 Patch Panels
- 2.6 Terminal Strip Panel
- 2.7 Radio Panel Shelf
- 2.8 Cables

3. SYSTEM OPERATIONAL TESTING 11
- 3.1 System Preparation
- 3.2 Installation
- 3.3 Operational Tests (San Diego, California, Spring 2000)
- 3.4 System Alignment
  - 3.4.1 System Test Equipment
  - 3.4.2 System Alignment Procedure
- 3.5 System Training

4. FIELD OPTIMIZATION 15
- 4.1 Repeater PTT Oscillation
- 4.2 Full Repeat Delay
- 4.3 Variable Receiver Audio Level
- 4.4 Trunking Event Tones and PTT Oscillation

5. CONCLUSIONS 17

6. FIGURES 18

APPENDIX A—ACRONYMS A-1

APPENDIX B—TCS SYSTEM RESOURCE BUDGET B-1

APPENDIX C—TCS SYSTEM PARTS LIST C-1

1. INTRODUCTION

The Public Safety Wireless Network (PSWN) Program works with public safety agencies nationwide to help achieve interoperability—seamless, coordinated, integrated public safety wireless communications that promote safe, efficient protection of life and property. The program was formed in response to the National Performance Review, now known as the National Partnership for Reinventing Government (NPRG). Guided specifically by Action A06 in the 1997 NPRG report *Access America—Reengineering Government Through Information Technology*, the PWSN Program works with the public safety community to improve the interoperability of wireless communications by promoting coordination and partnerships, seeking funding alternatives, advocating adequate public safety spectrum allocations and efficient spectrum use, supporting technical standards development, and fostering secure communications.

The development and implementation, for proof-of-concept purposes, of technical solutions for interoperability among public safety networks is one of the PSWN Program's main areas of activity. These solutions, which are put in place as pilot projects in regions throughout the country, are developed jointly by the PSWN Program Management Office (PMO) and public safety radio and operational personnel from the region. The individuals involved most directly in pilot development and operation constitute the pilot's Integrated Program Team, or IPT. IPT members focus the pilot effort and technical concept to be proven into a discrete, repeatable solution for an interoperability shortfall common among public safety agencies throughout the Nation. This approach allows the PSWN PMO to leverage the solution beyond the pilot region to benefit the public safety community more broadly.

The PSWN Program sponsored a San Diego IPT for 2 years. The IPT first supported a detailed case study assessment of interoperability in the San Diego-Imperial County region. The IPT then focused on pilot proof-of-concept activities targeting a specific interoperability shortfall, namely, the need for a transportable interoperability solution to support certain public safety response situations. In response, the PSWN Program and its San Diego IPT developed the Transportable Communications System (TCS). The IPT determined the TCS would be installed into the San Diego County's search and rescue bus. Features of the TCS include—

- Providing first response communications interoperability during the initial 24 to 48 hours of an emergency situation
- Potentially supplementing or extending the reach of fixed infrastructure coverage
- Providing transportable communications backup with flexible system configuration
- Enhancing local, state, and federal interoperability during emergency situations and special events.

The TCS consists of three basic building blocks: radios to be interconnected, an audio switch to provide the interconnections, and interface hardware (i.e., custom cables, terminal strips, patch panels) to provide the physical connectivity necessary to support TCS operation. In the configuration described in this report, the TCS is housed in a 19-inch open relay rack, and up

to 24 radios can interface with the TCS. Eleven radios at a time can be patched into the ports of the audio switch as needed. As described in this report, the audio switch used for the TCS was the JPS Communications ACU-1000, although other audio switches with equivalent functionality can be used. Consistent with ACU-1000 functionality, the TCS supports interconnections among the radios connected to it. These interconnections can be reprogrammed through control panel inputs without the need for any physical changes. The ACU-1000 supports up to 6 simultaneous call connections among installed modules.

The balance of this report describes the TCS in greater detail. The report is based on the implementation and initial operation of the TCS in the San Diego-Imperial County region. Accordingly, the details of the TCS configuration relate to specific requirements of that region. With that caveat, the remainder of this report was written in as general a manner possible to make it useful to all public safety agencies as a primer for the TCS.

2. SYSTEM COMPONENTS[1]

The TCS integrates several commercial off-the-shelf (COTS) products into a public safety wireless interoperability solution appropriate for certain situations. Figure 1 shows the TCS conceptual drawing (note that figures can be found starting on page 18), depicting the physical layout of components. Figure 2 on pages 19–20 shows several photographic views of the TCS. Figure 3 on page 21 shows the TCS system diagram, depicting the cable pathways through the system. The TCS uses a JPS Communications ACU-1000 Intelligent Interconnect System audio cross-connect switch with radio logic control. The JPS ACU-1000 is configured with 1 HSP-2 module, 1 Public Switched Telephone Network (PSTN)-1 module, and 11 DSP-1 radio interface modules. The DSP-1 and PSTN-1 modules mate to Patch Panel 1 (PP1), a 24-port RJ-45 panel. Each module has a DB-15 interface. Two RJ-45 ports on PP1 are reserved for each interconnected module. Up to 24 radios can interface with the TCS through its Terminal Strip Panel (TSP). Eleven radios and one PSTN line can be connected to the switch at one time with up to 6 call connections simultaneously. The TSP mates to Patch Panel 2 (PP2), a 48-port RJ-45 panel. Two RJ-45 jacks on PP2 are reserved for each interconnected radio. The user can interconnect several radios with the JPS ACU-1000. All components are housed in a standard 19-inch open relay rack. Technicians and operators have easy access to all interconnections.

2.1 19-Inch Open Relay Rack

The TCS was designed to accommodate up to 24 different radios in a mobile command vehicle (MCV) or equivalent. Eleven radios at a time can be patched in to the ACU-1000 ports as needed. All TCS electronic and mechanical hardware was installed into a Bud RR-1363-MG 19-inch open relay rack, which was sized for installation onboard the MCV.

A machine shop drilled the backs of the TCS rack rails to mount cable management rings. Spacers were used to position the rings flush with the edges of the rails. To allow maximum space for the TCS, the local agency technicians performed radio cabinet modifications aboard the MCV.

2.2 JPS ACU-1000

The ACU-1000 was configured for the following operations:

- Mobile–mobile
- Mobile–Public Switched Telephone Network (PSTN)
- Group calls
- PSTN dialout from TCS.

Eleven DSP-1 radio interface modules and 1 PSTN-1 telephone interface module were used to interconnect 11 radios and access an onboard telephone switch port.

---

1 Note that the specific system components and configurations described in this section reflect the way the TCS was set up to support the San Diego IPT's requirements. Because TCS is flexible, other configurations can be achieved within the limits of TCS resources.

The JPS ACU-1000 was provided +13.8 volt (V) via the MCV direct current (dc) power supply. Call interconnections were successfully established via RS-232 control from a personal computer (PC) using the program and control software JPS supplied.

2.3 Radios

The following radio models were already present in the MCV and were interconnected with the TCS:

- Low-band very high frequency (VHF)—Motorola Syntor X9000 high-power mobile radio with remote mount control head and conventional operation (Lo VHF)

- VHF (146 to 174 megahertz [MHz])—Motorola Spectra high-power mobile radios with remote mount control head and conventional operation (VHF-1 and VHF-3)

- VHF (146 to 174 MHz)—Motorola Spectra low/mid-power mobile radio with remote mount control head and conventional operation (VHF-2)

- Ultrahigh frequency (UHF)—Motorola Spectra high-power mobile radios with remote mount control head and conventional operation (UHF-1 and UHF-2)

- UHF T-Band—Motorola ASTRO Spectra low/mid-power mobile radio with remote mount control head and conventional operation (T-Band)

- Regional Communications System (RCS), 800 MHz—Motorola ASTRO Spectra low/mid-power mobile radios with remote mount control head and Project 25 CAI digital trunked operation (800-1, 800-2, and 800-3)

- City of San Diego, 800 MHz—Motorola Spectra high-power mobile radio with remote mount control head and conventional operation (800-4).

PSWN provided the following radio models for interconnection with the TCS:

- VHF programmable, VHF (146 to 174 MHz)—Motorola ASTRO Spectra high-power mobile radio with a W5 remote mount radio control head with Telecommunications Industry Association/Electronic Industries Alliance (TIA/EIA)-102 (Project 25) Common Air Interface (CAI) and conventional operation (replaces VHF-1)

- Department of Justice (DOJ) Justice Wireless Network (JWN), VHF (146 to 174 MHz)— Motorola ASTRO Spectra high-power mobile radio with a W7 remote mount radio control head with Project 25 CAI, conventional operation, encryption, over-the-air rekeying (OTAR), and multikeying (VHF-4)

- Department of the Treasury U.S. Customs Service (USCS), VHF (146 to 174 MHz)—Motorola ASTRO Spectra high-power mobile radio with a W9 remote mount radio control head and conventional operation, Securenet, VSELP, OTAR, and multikeying (VHF-5).

San Diego IPT members provided the following radio models for interconnection with the TCS:

- Department of Defense (DoD), UHF (406 to 420 MHz)—Motorola Spectra low/mid-power mobile radio with dash-mount configuration, which was converted to a W7 remote mount control head, and trunked operation (UHF-3)

- Marine Corps Camp Pendleton, UHF (406 to 420 MHz)—Motorola Spectra low/mid-power mobile radio with a W5 remote mount control head and conventional operation (UHF-4).

RG-58/U cable was used for radio frequency (RF) terminations. The RF cable was connected to two newly installed dual-band VHF/UHF Larsen NMO 150-450 antennas. Each dual-band antenna was fed by one VHF and one UHF radio via a Larsen AD 2/70 combiner. The radios were mounted in the rack in an alternating sequence of high-power (VHF) and low-power (UHF).

2.4 Power Distribution Panel

Power was fed through the TCS via a rack-mountable 800A dc distribution panel (DST Panel) manufactured by NewMar Power. The DST dc distribution panel provides a single location for power disconnect and replaces the radio and control head fuses with circuit breakers for safe reset in the case of power surges.

The DST was factory modified to provide a split bus (bus A and bus B), each controlled by a master 100A breaker.

Bus A holds two 40A breakers and four 5A breakers. Each 40A breaker connects to a mobile radio. Two 5A breakers connect to the remote mounted radio control heads. Two 5A breakers are connected in parallel to provide a 10A breaker for the JPS ACU-1000.

Bus B holds two 40A breakers and two 5A breakers. Each 40A breaker connects to a mobile radio. Two 5A breakers connect to the remote mount radio control heads of the radios.

A single point ground bus bar was provided in the rack and connected to the MCV ground distribution bus.

2.5 RJ-45 Patch Panels

Two rack-mountable Superior Modular Products Category 5 T568B RJ-45 patch panels, PP1 and PP2, were inserted between the radios and the ACU-1000 to allow up to 24 external radios to be available for interface to the 11 DSP-1 modules. These provided versatile cross-patching of critical audio path connections. PP1 is a 24-port RJ-45 patch panel terminated with four female 25 pair Telco connectors. PP1 is hinged for easy access to PP1, PP2 and ACU-1000 cable connections. PP2 is a 48-port RJ-45 patch panel terminated with eight female 25 pair Telco connectors. Two standard category-5 RJ-45 patch cables were used to connect each radio's audio into the ACU-1000 DSP-1 modules.

The PP1 ports connect to DSP-1 modules in sequential order. For example, ACU-1000 DB-15 connector 1 connects to PP1 ports 1 and 2, and DB-15 connector 2 connects to PP1 ports 3 and 4.

PP2 ports are wired to interconnected radios in the following configuration:

VHF						UHF						800						TCS					
VHF-1		VHF-2		VHF-3		UHF-1		UHF-2		Spare		800-1		800-2		800-3		VHF-4		VHF-5		UHF-3	
1	2	3	4	5	6	7	8	9	10	11	12	13	14	15	16	17	18	19	20	21	22	23	24
Lo VHF		Spare		Spare		T-Band		Spare		Spare		800-4		Spare		Spare		UHF-4		Spare		Spare	
25	26	27	28	29	30	31	32	33	34	35	36	37	38	39	40	41	42	43	44	45	46	47	48

2.6 Terminal Strip Panel

The TCS provided a rack-mountable sliding shelf of terminal strips for external connections (the TSP). It is a Black Box rack-mountable sliding shelf with eight Thomas & Betts/RDI terminal strip boards. Each Thomas & Betts/RDI terminal strip board terminates 50 screw terminals to one 50-pin (25 pair) female Telco connector. The boards are mounted to the sliding shelf via four Thomas & Betts/ RDI 12-inch SnapTrak mounting boards. A linch pin holds the sliding shelf in place. Cables were carefully sized and positioned for easy use of the sliding shelf.

2.7 Radio Panel Shelf

Four mobile radios were housed in the TCS with custom brackets (see Figures 1 and 2 on pages 17–19). This housing was designed to provide easy removal of the radios with front access to each radio's interconnections. The mobile radios can slide into their mounting plates using the mobile mounting brackets. A hinged panel covering the radio housing was used to mount the control heads in the following front rack configuration:

VHF-4 W7	UHF-3 W7
UHF-4 W5	VHF-5 W9

The custom radio housing required significant integration effort. Two machine shops coordinated to develop 2 types of brackets—radio control head and mobile radio mounting brackets. Two Bud 20-inch, aluminum rack-mountable vented shelves serve as the basis for the design. Each front-mounted shelf has cantilevered supports. The top shelf is inverted to conserve front panel space.

The mobile radio mounting brackets were designed to accommodate a Motorola Astro Spectra high-power mobile radio as the most conservative case. The custom C-brackets are made of steel due to the significant weight of a high-powered mobile radio and are corrosion protected with a flat black powder coat finish. Four brackets are spaced evenly across the shelves and are screwed to the shelves through the shelf vents. The brackets are placed as far to

the back of the shelves as possible. Mobile radio mounting plates attach to the brackets with pem nuts. Low/mid-power mobile radios are easily accommodated with the use of a trunnion. The low/mid-power mobile radio screws to its trunnion, and the trunnion screws to the bracket with the addition of screw holes in the C-brackets.

The radio control head mounting brackets and the front panel were designed to accommodate a Motorola W4, W5 or W7 remote mount control head as the most general case. The custom L-brackets are stamped and bent from aluminum sheets and are corrosion protected with a gold iridite finish. Four brackets are placed evenly across the front panel. Four holes sized for a W4, W5 or W7 control head are milled through the aluminum front panel. Remote mount radio control heads screw to their trunnions, and the trunnions screw to the brackets. The W9 control head is easily accommodated with the addition of screw holes in the L-brackets.

2.8 Cables

Seven cable types were used with the TCS:

- **Power Cables.** All positive power connections interface via the NewMar Power DST DC Distribution Panel with super flexible #4 copper stranded cables. All DC equipment aboard the MCV is powered with four 6-volt (V) batteries. Two batteries in series supply 12V for "Battery A." Two batteries in series supply 12V for "Battery B." The vehicle ground was connected to the ground bus bar at the base of the TCS rack.

- **Radio Interconnection Cables.** The MCV radios used custom, 8-conductor or 16-conductor cables to interface with the TCS on the TSP. Each radio has a unique pinout to interface properly with the TCS. Radio schematics were used to determine the proper interconnections.

  Two methods of Motorola radio interconnection are possible with the TCS. The first involves internal modifications of the radio-soldered jumpers to provide the transmit and receive audio on the radio options accessory connectors, and second requires tapping the control head cabling to access the audio path.

  The ASTRO Spectra low/mid- and high-power radios all required the first method to provide the transmit and receive audio on either the J2 DB-15 rear radio options accessory connector or the J6 DB-25 front radio options accessory connector.

  Caution: The radio control head volume adjusts the audio level into the ACU-1000 DSP-1 radio interface module.

  Caution: An interconnected radio must be disconnected from the ACU-1000 for that radio to operate separately from the TCS system. The Category 5 (Cat5) RJ-45 cables between PP1 and PP2 are a useful point of disconnection.

ACU-1000 DSP-1 Module (Note: 1)		Motorola High-Power ASTRO Spectra and Spectra J6 Connector (Notes: 2, 3, and 4)	
Pin #	**Name**	**Name**	**Pin #**
14	TxA	Mic Hi	12
6	TxB	Mic Lo	11
8	RxA	Spkr Hi	25
15	RxB	Spkr Lo	24
12	PTT Out	PTT	1
1,5	Gnd	Dig Gnd	18
7	Audio Gnd	Ana Gnd	10

ACU-1000 DSP-1 Module (Notes: 1 and 6)		Motorola Low/Mid-Power ASTRO Spectra and Spectra J2 Connector (Notes: 5, 6, and 7)	
Pin #	**Name**	**Name**	**Pin #**
14	TxA	Mic Hi	15
6	TxB	Dig Gnd	8
8	RxA	Spkr Hi	6
15	RxB	Spkr Lo	7
12	PTT Out	PTT	13
1,5	Gnd	Dig Gnd and Emer	8 & 2
13	COR IN	Busy	9

COR, Carrier-Operated Relay; PTT, push to talk

Notes:

1. Resistor R60, 47 kilo-ohms, on the DSP-1 module was removed to prevent the Motorola Astro Spectra and Spectra radios from being “keyed” when the ACU-1000 lost power.

2. For Spectra radios with W5 and W7 control heads, no jumpers were modified.

3. For ASTRO Spectra radios with W5 and W7 control heads, jumper JU605 is IN on Interconnect Board HLN6486D.

4. For Spectra radios with a W9 control head, the following jumpers were modified:

Jumper	Function Command Board HLN5558C	
	Mic Hi	**PTT**
JU521	OUT	
JU513	IN	
JU518		OUT
JU500		IN
	Interconnect Board HLN6486B	
JU605	IN	

5. The following jumpers were modified:

Jumper	Function Command Board HLN5558B	
	Mic Hi	PTT
JU521	OUT	
JU513	IN	
JU518		OUT
JU500		IN

6. The COR In/Busy feature was wired up for the ASTRO Spectra and Spectra radios. However, the COR function does not work in the ASTRO Spectra or Spectra radios. This connection probably could be removed in future installations.

7. Pin 2, Emer, must be tied to Pin 8, GND, so the radio can be powered down by the front panel.

Recommended reference manuals are as follows:

– Motorola:
  - ASTRO Digital Spectra
    68P81076C20-A, Basic Service Manual
    68P81076C25-0, Detailed Service Manual

  - Spectra
    68P8010W39-B, UHF FM Two-Way Radio

– JPS:
  - 5961-200200, ACU-1000 Installation and Operation Manual, version 2.0.

Interconnections for radios mounted outside the TCS rack are as follows:

– Lo VHF, custom terminal strip interface

– VHF-1 and VHF-3, front J6 connector (DB-25)

– VHF-2, rear J2 connector (DB-15)

– UHF-1 and UHF-2, front J6 connector (DB-25)

– T-Band, rear J2 connector (DB-15)

– 800-1, 800-2, 800-3, and 800-4, rear J2 connector (DB-15).

Interconnections for radios mounted within the TCS rack are as follows:

– VHF-4 and VHF-5, front J6 connector (DB-25)

– UHF-3 and UHF-4, front J6 connector (DB-25).

Total cables are listed below.

- 6 DB-15 cables (all 8-conductor)
- 8 DB-25 cables (four 8-conductor, four 16-conductor)
- 1 terminal strip cable.

Radio interconnection cables were continuity tested for quality control.

- **50-Pin Telco-Telco Cables.** PP2 and the TSP interface using eight 50-pin cables terminated with male Telco connectors on each end. The 50-pin Telco-Telco cables were continuity tested for quality control.

- **Category 5 T568B RJ-45 Patch Cables.** PP1 and PP2 interface using both a 1-foot and 2-foot Category 5 (Cat5) RJ-45 cables with T568B wiring. Each cable terminates eight pins. Fifteen pins are necessary to fully terminate an ACU-1000 module; therefore, two Cat5 patch cables are required for interconnecting a radio to an ACU-1000 module. The Cat5 cables were continuity tested for quality control.

- **50-Pin Telco to DB-15 Connector Cables.** PP1 and the JPS ACU-1000 modules interface via four 50-pin Telco to DB-15 connector cables. Each 50-pin cable terminates a male Telco connector on one end and three DB-15 connectors on the other end. The Telco to DB-15 cables were continuity tested for quality control.

- **RS-232 DB-9 Cable.** An RS-232 DB-9 serial cable was provided for JPS console application interconnection with the ACU-1000.

- **DB-15 HSP-2 Module Cable to MCV Recorder.** A custom DB-15 cable was made to interconnect the JPS ACU-1000 HSP-2 module's monitor output with provided leads to the MCV recorder.

3. SYSTEM OPERATIONAL TESTING

The TCS was integrated from commercially available products, shipped to regional representatives, and installed for field operations. It was tested for full functionality before shipment. The JPS Communications ACU-1000 provided the audio call patching and radio logic control. Each ACU-1000 DSP-1 module and interconnected radio was tested and aligned for unity gain throughout the TCS before shipment and again after field installation. All interconnected radios used in the testing were manufactured by Motorola and were either high-power or low/mid-power. They included the ASTRO Spectra, Spectra, and Syntor X9000.

3.1 System Preparation

The use of ASTRO Spectra and Spectra radios required a modification to the DSP-1 module cards. One lead of resistor R60 had to be desoldered and lifted out of circuit to prevent these radios from inadvertently keying should the ACU-1000 be powered off. Any modified modules were identified with yellow dot stickers. The ACU-1000 manufacturer, JPS Communications, recommended this field modification.

The DSP-1 modules were each configured for voice-operated transmit (VOX) operation. This change was made because none of the interconnected radios provided COR logic output for direct interconnection with the DSP-1 modules.

The ACU-1000 was controlled via console software provided by JPS Communications, which was loaded onto a PC with Windows 95. The ACU-1000 can also be controlled via its front keypad. Each DSP-1 module can be configured for proper operation via the console software. Preprogrammed call connections can be saved into nonvolatile memory at the front keypad with command *36. Call connection configurations were easily mastered by the agency technicians.

3.2 Installation

The TCS installation was a 4-day effort. All requisite modifications to the MCV vehicle were performed by owner agency personnel. The MCV modifications included modifying space, moving obstructions, running power leads, and mating RF terminations. Federal and military radios were programmed by local agency representatives. Customized cables were manufactured on site as needed.

3.3 Operational Tests (San Diego, California, Spring 2000)

Booz·Allen & Hamilton representatives, with Regional Communications System (RCS) guidance and PSWN PMO oversight, conducted operational testing at the San Diego County Sheriff Compound. Federal Bureau of Investigation (FBI) and Drug Enforcement Administration (DEA) representatives were also on site during testing. The RCS is an 800-MHz trunked system with more than 44 local and state participating agencies. The City of San Diego has an 800-MHz conventional system with eight participating agencies. The Department of Justice (DOJ) shares a VHF (162 to 174 MHz) conventional system with six participating agencies. The Department of Defense (DoD) uses an analog UHF (406 to 420 MHz) trunked

system with six participating agencies. The Unites States Customs Service (USCS) uses a Motorola proprietary digital very high frequency (VHF; 162 to 174 MHz) conventional system with three participating agencies. Border Tactical (BORTAC) coordinates 27 participating agencies across each of the systems listed using a collection of lease line patches.

Call connections were established between RCS and Marines Corps Camp Pendleton, RCS and DOJ, RCS and DoD, and RCS and San Diego City. A group call with RCS, DOJ, and Camp Pendleton was also tested. Successful interoperability among VHF, UHF, and 800-MHz bands was demonstrated during the TCS proof of concept (POC). More than 90 percent of San Diego regional local, state, and federal agencies are identified as having enhanced interoperability capabilities with the implementation of the TCS, which provides interoperable links among the predominant local, state, and federal communications systems in the region.

3.4 System Alignment

3.4.1 System Test Equipment

The following equipment was used in TCS system tests:

- Motorola R-2670
- Motorola R-2670 with the Project 25 Frequency Division Multiple Access (FDMA) Test Set
- Fluke Digital Multimeter.

3.4.2 System Alignment Procedure

TCS system alignment was conducted in two parts (see Figures 4–7 on pages 22–25). A single radio interface module was aligned first and used as a reference for subsequent radio interface module alignments.

- **Part 1**
  - **Step 1.** The VHF-1 radio was programmed for analog frequency modulation (FM) mode to be used as the reference radio for alignment of the TCS system (see Figures 4 and 5 on pages 22–23). TCS system alignment was performed with a 1-kilohertz (kHz) modulation signal. The carrier was set for a 3-kHz frequency deviation, and the private line (PL) tone was set for a 0.5-kHz frequency deviation for a total deviation of 3.5 kHz to perform a more conservative system alignment than specified.

    Unless otherwise indicated, all alternating current (ac) voltages are root mean squared (rms). Telephony standards reference 0 dBm as 1 milliwatt (mW) across a balanced 600-ohm load. All readings in the JPS system are referenced to 0 dBm.

- **Step 2.** The VHF-1 analog FM radio was set for 155.160-MHz transmit and 155.160-MHz receive with a 103.5-hertz (Hz) PL tone. A Motorola R-2670 provided an FM signal with a carrier frequency of 155.160 MHz, which was modulated with a 1-kHz tone with 3-kHz deviation and a PL tone of 103.5 Hz with 0.5-kHz deviation. The signal was output at –70 dBm into the VHF-1 radio. This level allowed the radio to be fully quieted (> 20-decibel [dB] quieting). The audio output from the radio was measured to be 200 millivolt (mV) with the control head volume level set to one press above level 7.

- **Step 3.** All ACU-1000 DSP-1 modules (1 through 11) were configured for VOX half-duplex operation with a Med1 threshold, a 375-millisecond (ms) hang time, a 60-ms audio delay, and COR sampling disabled. Disabling COR sampling allows the transmit timeout timer to be active. ACU-1000 module number 1 is a DSP-1 radio interface module. Module 1 was configured for VOX operation for the VHF-1 radio. Module 1's receive level was optimal at the ACU-1000 program software setting of 6, corresponding to –12 dBm according to JPS specifications, given the input 200 mV signal from the VHF-1 radio.

- **Step 4.** Interconnection with the analog FM UHF-1 radio, module 4, allowed the transmit level of module 4 to be aligned. A transmit level setting of 5 was optimal; it corresponded to –4 dBm as specified by JPS. The transmit level setting of 5 provided an 82 mV signal into the UHF-1 radio. The UHF-1 radio was set for 453.500-MHz transmit and 453.500-MHz receive with a 146.2-Hz PL tone. A Motorola R-2670 received the FM signal and demodulated it to measure the deviation present in the resultant baseband signal. The signal deviation for the modules tested as described was measured to be at 3.5 kHz, thereby verifying that the complete audio and RF TCS system path was aligned for proper operation, with unity gain.

- **Step 5.** The process was reversed and the UHF-1 radio provided audio into its associated module 4 and, through the ACU-1000 via a call connection with module 1, into the VHF-1 radio (see Figures 6 and 7 on pages 24–25). A Motorola R-2670 provided an FM signal with a carrier frequency of 453.500 MHz, which was modulated with a 1-kHz tone with 3-kHz deviation and a PL tone of 146.2 Hz with 0.5-kHz deviation. The signal was output at –70 dBm into the UHF-1 radio. As above, this level allowed the radio to be fully quieted (> 20-dB quieting), thereby eliminating noise as a component of any measured deviation. The audio output from the radio was measured to be 200 mV with the control head volume level set at one press above level 7. The transmit level of VHF-1 was optimal at level setting 4, corresponding to –8 dBm according to JPS specifications, with a measured 97 mV. A Motorola R-2670 received the FM signal and demodulated it to measure the deviation present in the resultant baseband signal. The signal deviation for the modules tested as described was measured to be at 3.5 kHz, thereby verifying that the complete audio and RF TCS system path was aligned for proper operation, with unity gain.

- **Part 2.** Once module 1 and module 4's transmit and receive levels were set as described, every other module and its associated radio were tested for proper level settings to achieve overall system alignment. Most module receive levels were optimal at a level setting of 4. As above, each module and radio pair was tested for—

  – Radio control head volume level to achieve the target (~188 mV) audio into the radio's corresponding DSP-1 module

  – DSP-1 module transmit level to achieve the target (~80 mV) into the corresponding radio.

  Each radio's control head volume level and its associated module's transmit level was measured. Crosstalk testing was done to confirm that no crosstalk was detected between ACU-1000 modules or radio interconnections.

Radio	VHF-1	VHF-2	Lo VHF	UHF-1	UHF-2	UHF-3	800-1	800-2	800-4	VHF-4	VHF-5
Control Head Volume Level Setting	7+	7+	7+	7+	7+	5+	5+	5+	7+	5	5
Receive Audio Level (mV)	200	200	185	200	185	185	183	200	200	200	200
DSP-1 Module	**1**	**2**	**3**	**4**	**5**	**6**	**7**	**8**	**9**	**10**	**11**
Receive Level Setting	6	4	4	4	4	4	4	4	4	4	4
Transmit Level Setting	4	1	4	5	2	5	4	2	4	4	4
Transmit Audio Level (mV)	97	102	86	82	85	86	86	92	95	85	92

All settings were saved in the console application as a reference test file.

3.5 System Training

System operation requires an operator to be proficient with the JPS Communications ACU-1000 console software interface and the technical parameter settings. System operators must control the channel settings of interconnected radios and the technical parameter settings of the ACU-1000 in addition to establishing and breaking call connections. Technicians must be able to install and operate the JPS Communications console software interface to the ACU-1000 and perform the alignment procedures to set audio interconnection levels properly and to optimize DSP-1 module configuration parameters for proper field operation.

4. FIELD OPTIMIZATION

Several TCS system operational challenges were revealed during testing. Field tests included interoperability of the TCS with several radio systems of various modulation schemes and system architectures. Call connections were established among disparate radio systems. In addition to system alignment, the JPS ACU-1000 audio switch required parameter-setting adjustments to optimize call connections.

4.1 Repeater PTT Oscillation

Preliminary tests revealed that when a call between two repeater channels was interconnected by the TCS, it resulted in an oscillation of keyed states between the repeater systems (see Figure 8 on page 26). The problem began after the initial call from agency A was completed and the interconnected TCS radio B released its PTT. The remote repeater for agency B continued to transmit for the duration of its hang time. Because the TCS radio B was no longer transmitting, it detected the hang time audio, and if the audio was noisy or scratchy, the VOX activated keying the connected TCS radio A. As a result, the Agency A remote repeater was brought up again. After the agency B repeater hang time expired, the cycle reversed. Once started, this repeater oscillation cycle could continue almost indefinitely. To reduce the probability of this happening, the DSP-1 module can be configured for the Voice Modulation Recognition (VMR) circuit, as recommended by JPS. Also, the "COR Inhibit After PTT" parameter can be adjusted to minimize repeater hang-time effects. The default COR Inhibit setting is 1, corresponding to 100 ms. A setting of about 6 (2 seconds) was identified as a preferred setting. An increase in the "COR Sampling Interval," if COR Sampling is enabled, from the factory default of 4 (5 seconds) to 9 (10 seconds) might minimize adverse oscillation by disturbing the oscillation by releasing the keyed state for a brief moment. The preferred operation used the VOX circuit in conjunction with a modification of the COR Inhibit setting.

Oscillations can also occur when high-powered mobile radios and their antennas are closely positioned. Receiver desensitization may occur, in which the operation of radio A directly causes radio B to operate. Radios can oscillate keyed and receive states under these conditions. Alternatively, a static keyed state for radio A and a static receive state for radio B can also occur. The VOX of the DSP-1 module for radio B can activate and force radio A to stay keyed. As above, VMR, COR Inhibit, and COR Sampling can mitigate adverse effects, but sufficient RF isolation among radios is advisable.

4.2 Full Repeat Delay

The total delay, composed of each system's delay plus the ACU-1000 VOX or VMR delay, was also identified as a TCS variable that required improvement. The total delay in some connections was about 3 seconds. The DSP-1 module's Audio Delay setting was identified as a parameter that could be adjusted to minimize the loss of the first few seconds of call audio. Proper audio level settings are an effective solution that should be explored before other parameters are adjusted. If VMR is used, the Noise Reduction Value parameter may need to be adjusted for proper control.

4.3 Variable Receiver Audio Level

The Motorola radios prevented using independent receive audio levels, and therefore, the volume control was always active on the radio control head. This situation created an alignment problem. Whenever the volume level on the control head is adjusted, the audio level changes in the prealigned DSP-1 module. Because console personnel will undoubtedly adjust the volume level during mission operations, they must be briefed on what happens when they manipulate the control head volume and advised to return it to a predetermined (or posted) level setting to assure proper TCS operation.

4.4 Trunking Event Tones and PTT Oscillation

When the TCS interconnects trunked and conventional systems, errant trunking talk permit tones may be transmitted (see Figure 9 on page 27). In this scenario, a conventional radio call is received by the TCS conventional radio and passed through to activate an interconnected trunked TCS mobile radio, which requests a channel. As the conventional operator continues speaking , the trunked radio, not yet transmitting, receives its PTT activation from the control channel and generates a talk permit tone. This tone is passed to the conventional TCS mobile along with VOX PTT logic and keys the TCS conventional radio, thereby transmitting the talk permit tone over the air while the conventional channel is still in use. This situation can happen if the push-to-talk (PTT) logic has priority over the COR logic on the DSP-1 module associated with the conventional radio (the default setting).

A few possible solutions are identified for the talk permit tone difficulties. The Type 1 Trunking setting for the DSP-1 modules alleviates all talk permit tone problems if all radio connections are available. The Type 1 Trunking setting requires a separate PTT acknowledge output from the radio to indicate when the radio is granted a channel. If available, the radio logic output is connected to the AUX 1 In, pin #4 of the DSP-1 module. The Motorola mobile radios do not provide such a separate PTT acknowledge output. To avoid oscillations, COR priority over PTT for the conventional radio may be considered. If a particular mutual aid talk group is used for the trunked radio system, the trunked system could be modified so that the talk group always uses the same RF channel, thereby eliminating the need for all trunked radios using the mutual aid talk group to wait for channel assignment. The COR Inhibit time for the trunked radio DSP-1 module may also be adjusted to prevent the radio from passing the trunking talk permit tones. VMR operation, instead of VOX, may inhibit passing the trunking talk permit tones, but this alternative has not yet been tested in the TCS. A practical solution is simply to program the trunked radio in the TCS, if possible, not to emit talk permit tones.

A trunked system interconnect to a conventional repeater system may also cause PTT oscillations to occur in much the same sequence as described previously in section 4.1.

5. CONCLUSIONS

The TCS has successfully demonstrated a potential public safety wireless interoperability solution. Several technical and operational challenges were identified and may be overcome with radio modifications, DSP-1 modifications, TCS system alignment, and ACU-1000 parameter adjustments.

Each radio model is unique in the way it provides audio and squelch logic control for user interface. Integrating the JPS ACU-1000 requires planning and engineering for proper radio interconnection. Many radio interconnections have yet to be documented.

Each ACU-1000 module in San Diego has been adjusted for optimal transmit and receive levels for the interconnected radios. User-selectable ACU-1000 module parameters are critical to proper system operation. The levels described here serve only as baseline recommended levels. Module transmit and receive levels may vary slightly as the unit warms up or as different DSP-1 modules are connected to different radio impedance. The VOX settings must be optimized for field conditions during field optimization.

6. FIGURES

Figure 1. TCS Conceptual Drawing

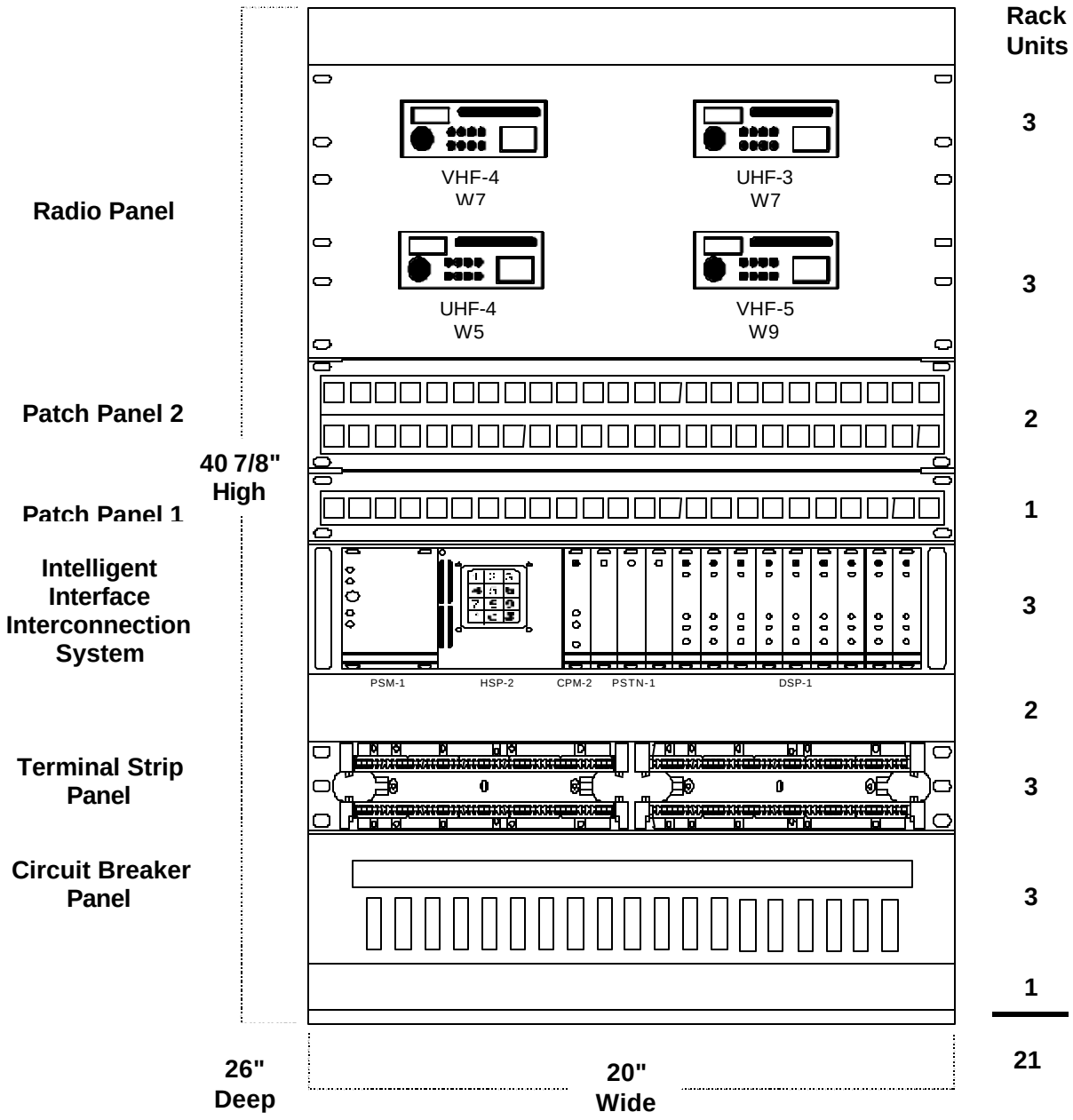

1 Rack Unit = 1.75"
Drawing not to scale

Figure 2. TCS Photographs

A.TCS Prior To Shipment
(Front Closed)

B.TCS Prior To Shipment
(Front Open)

Figure 2. TCS Photographs

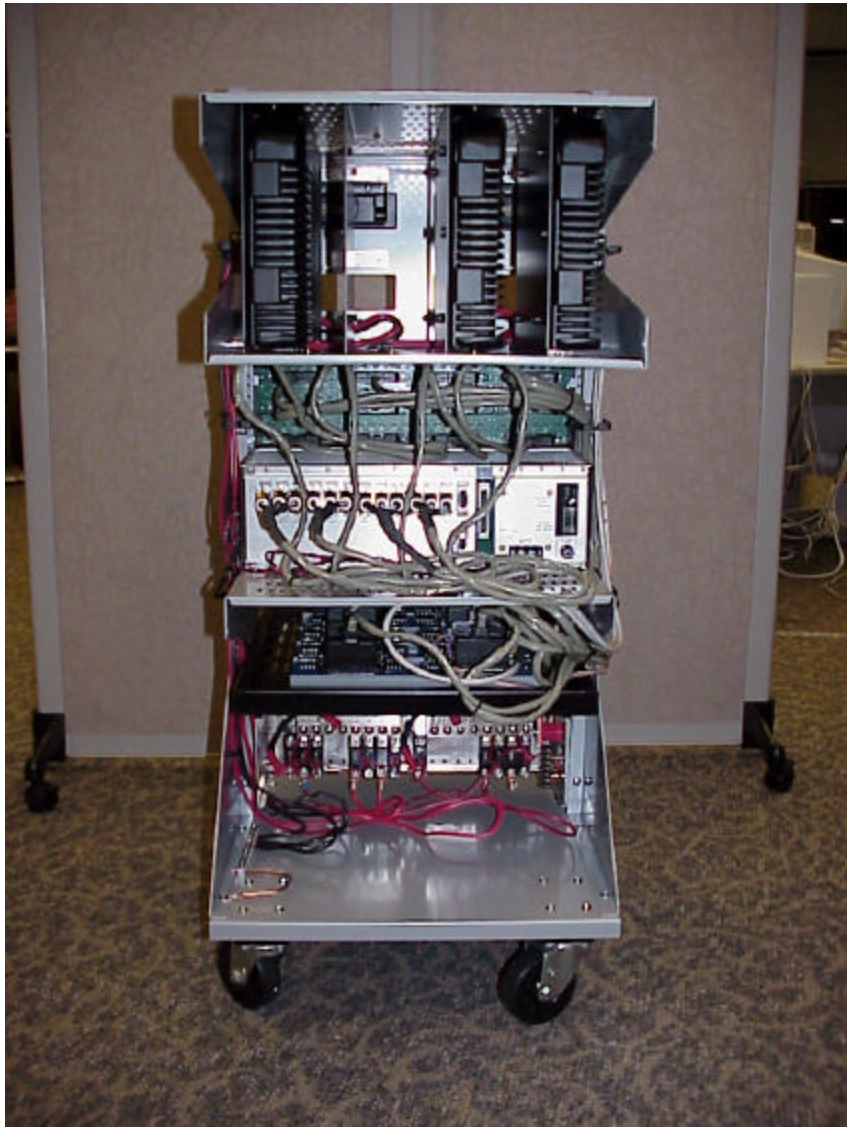

C. TCS Prior To Shipment
(Back)

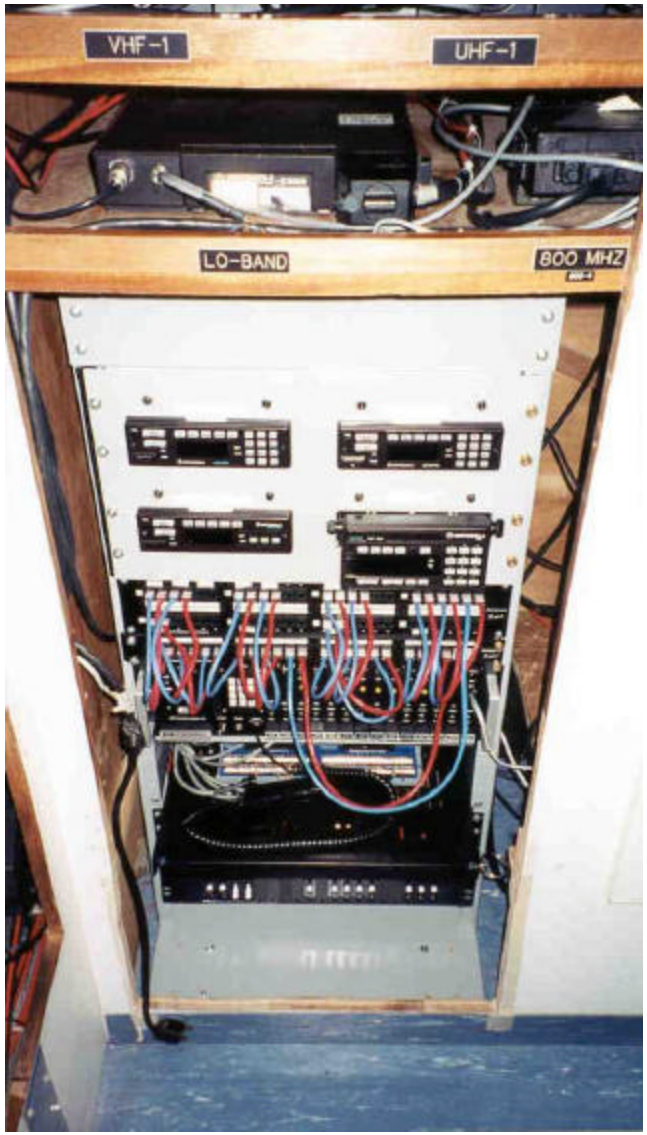

D. TCS Installed

Figure 3. TCS System Diagram

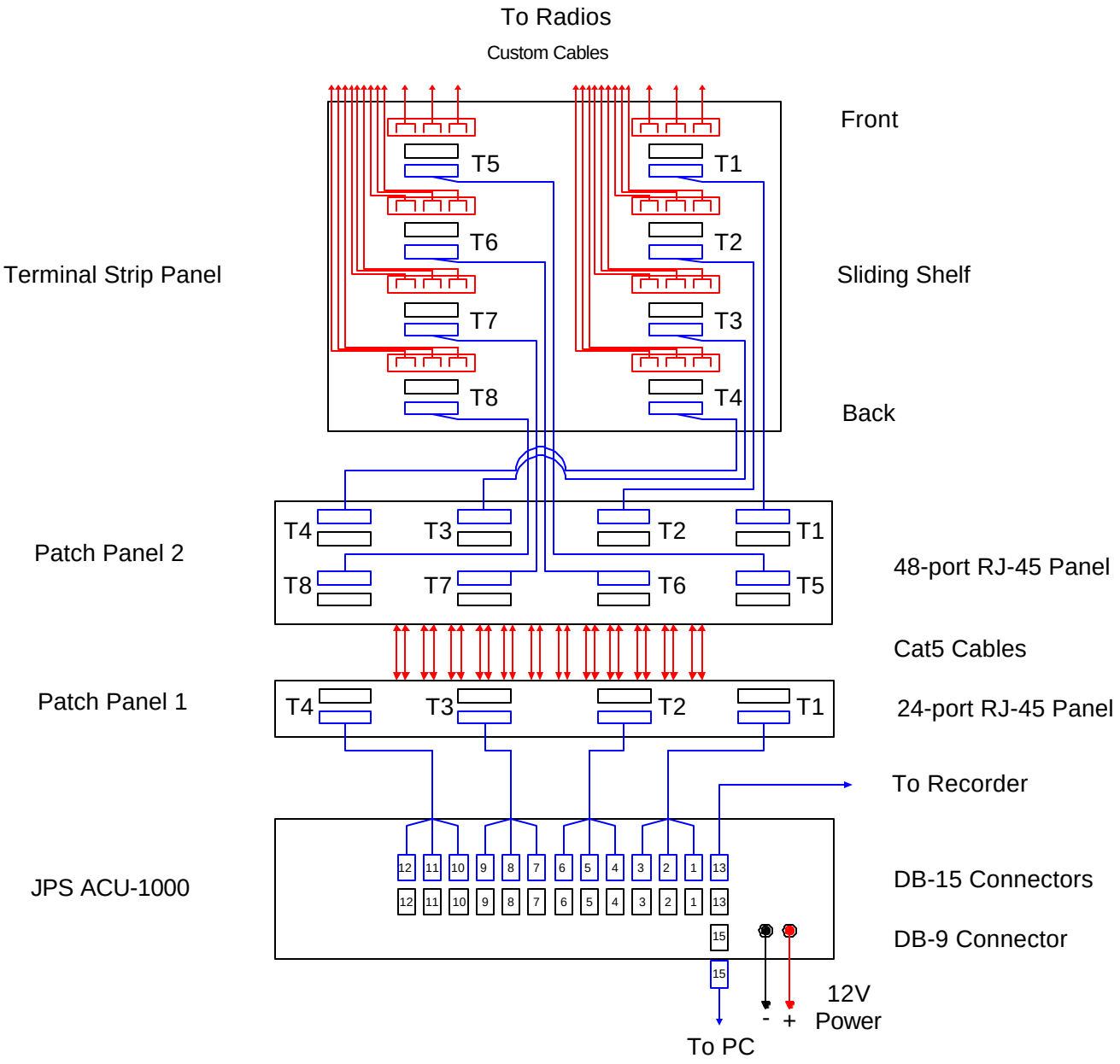

Note: Back of units shown

Figure 4. TCS System Alignment Procedure
Part 1 - Steps 1 to 4

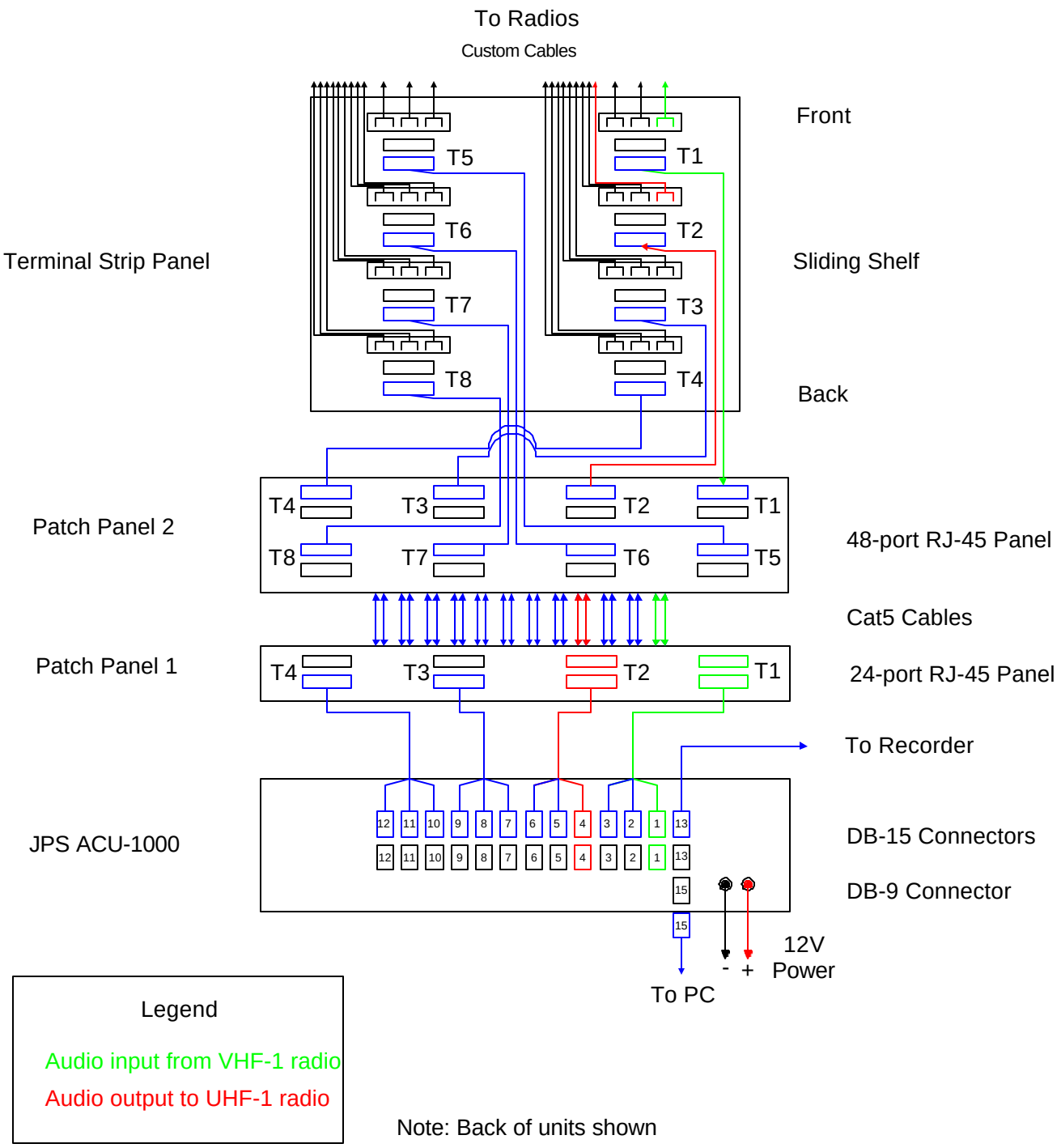

Figure 5. TCS System Alignment Procedure
Part 1 - Steps 1 to 4

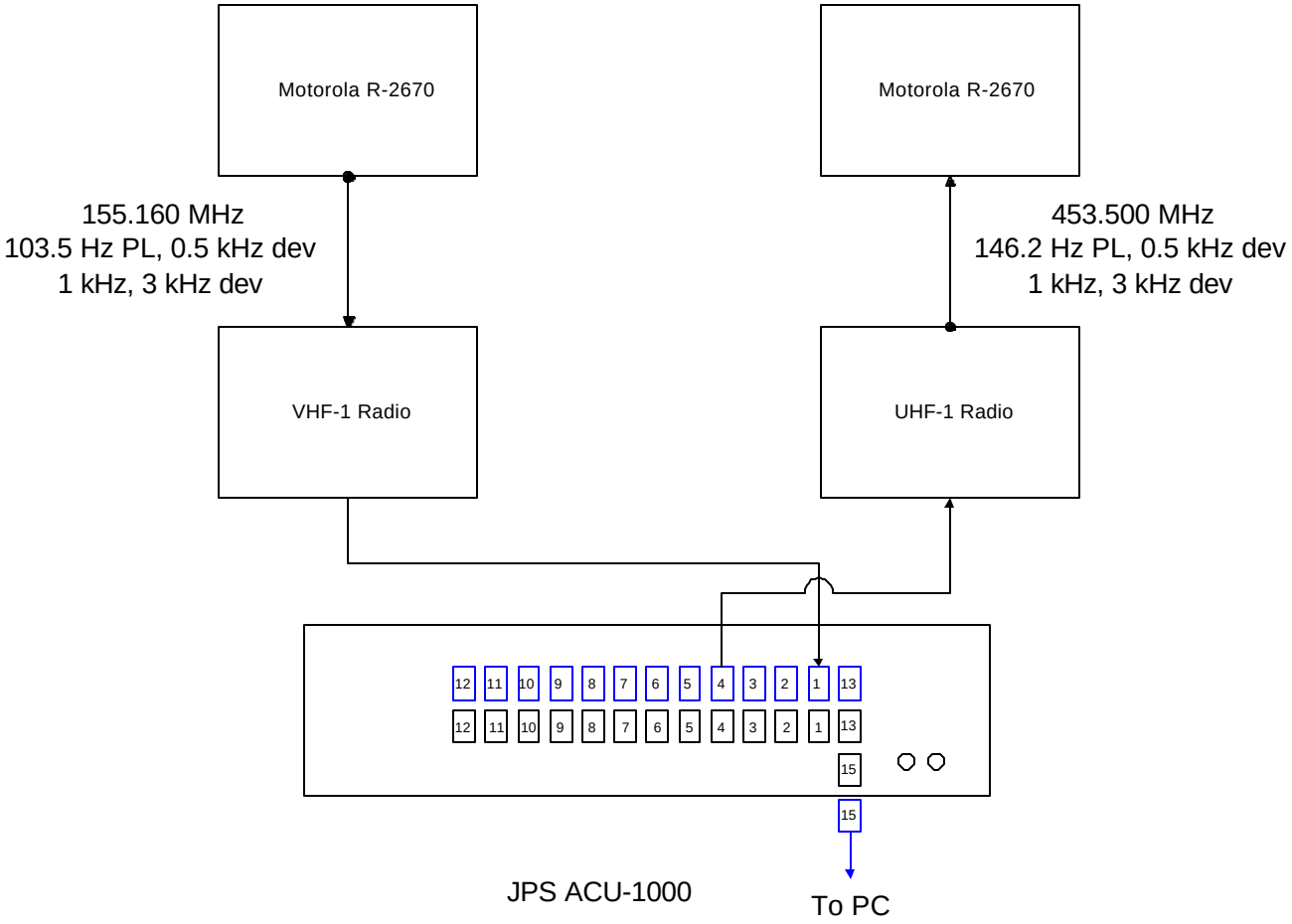

Figure 6. TCS System Alignment Procedure
Part 1 - Step 5

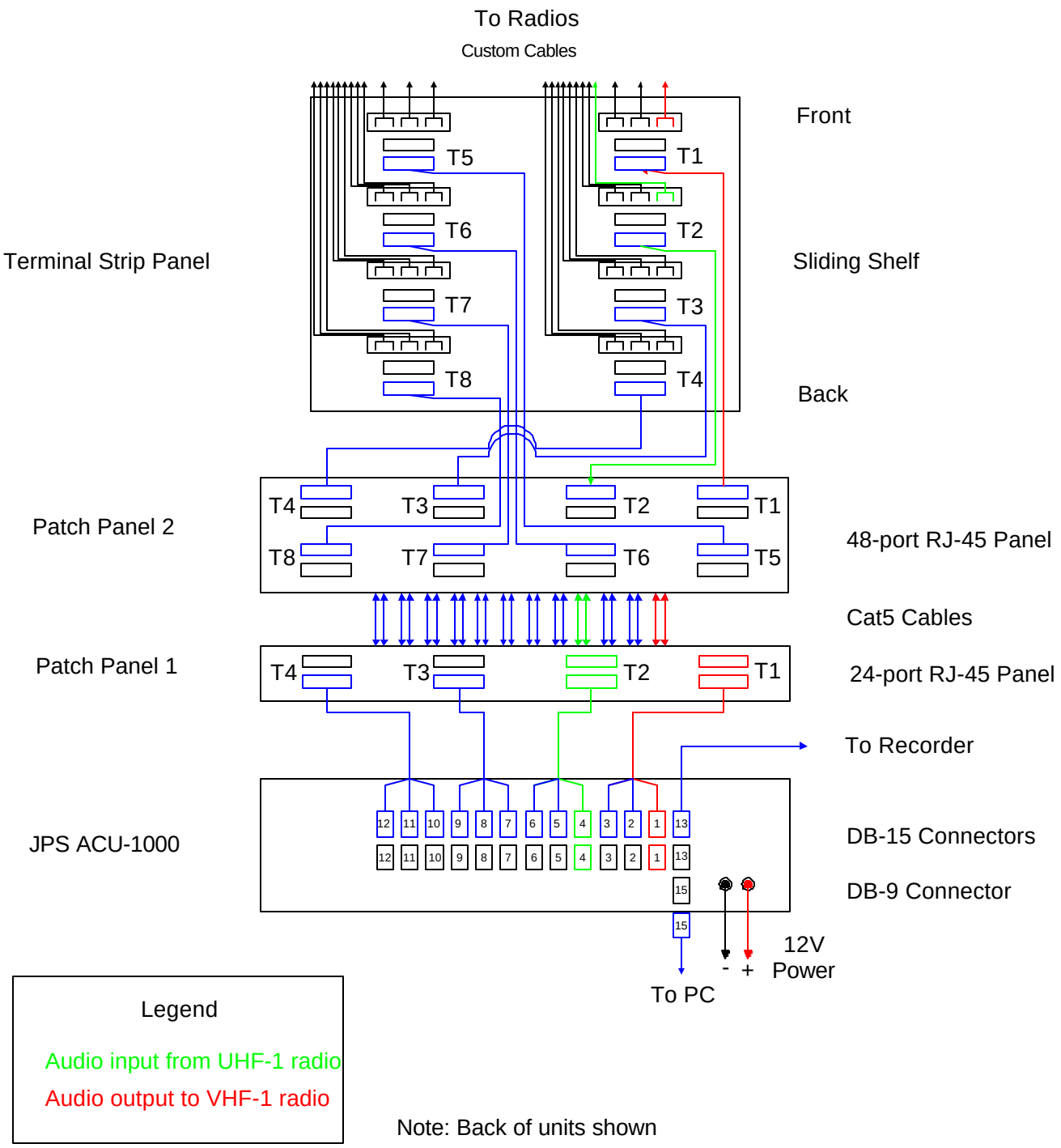

Figure 7. TCS System Alignment Procedure
Part 1 - Step 5

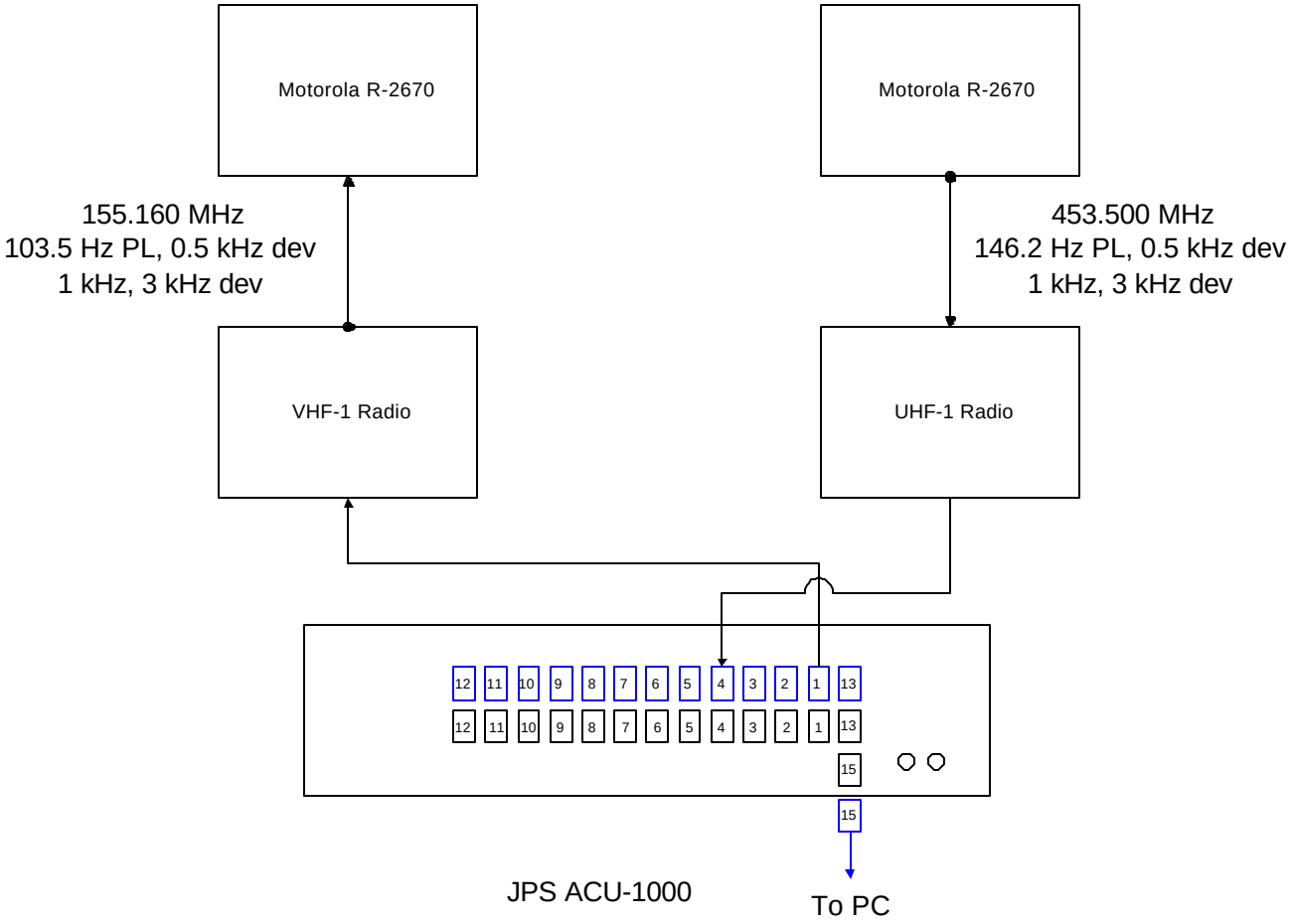

Figure 8. Field Optimization
Repeater PTT Oscillation

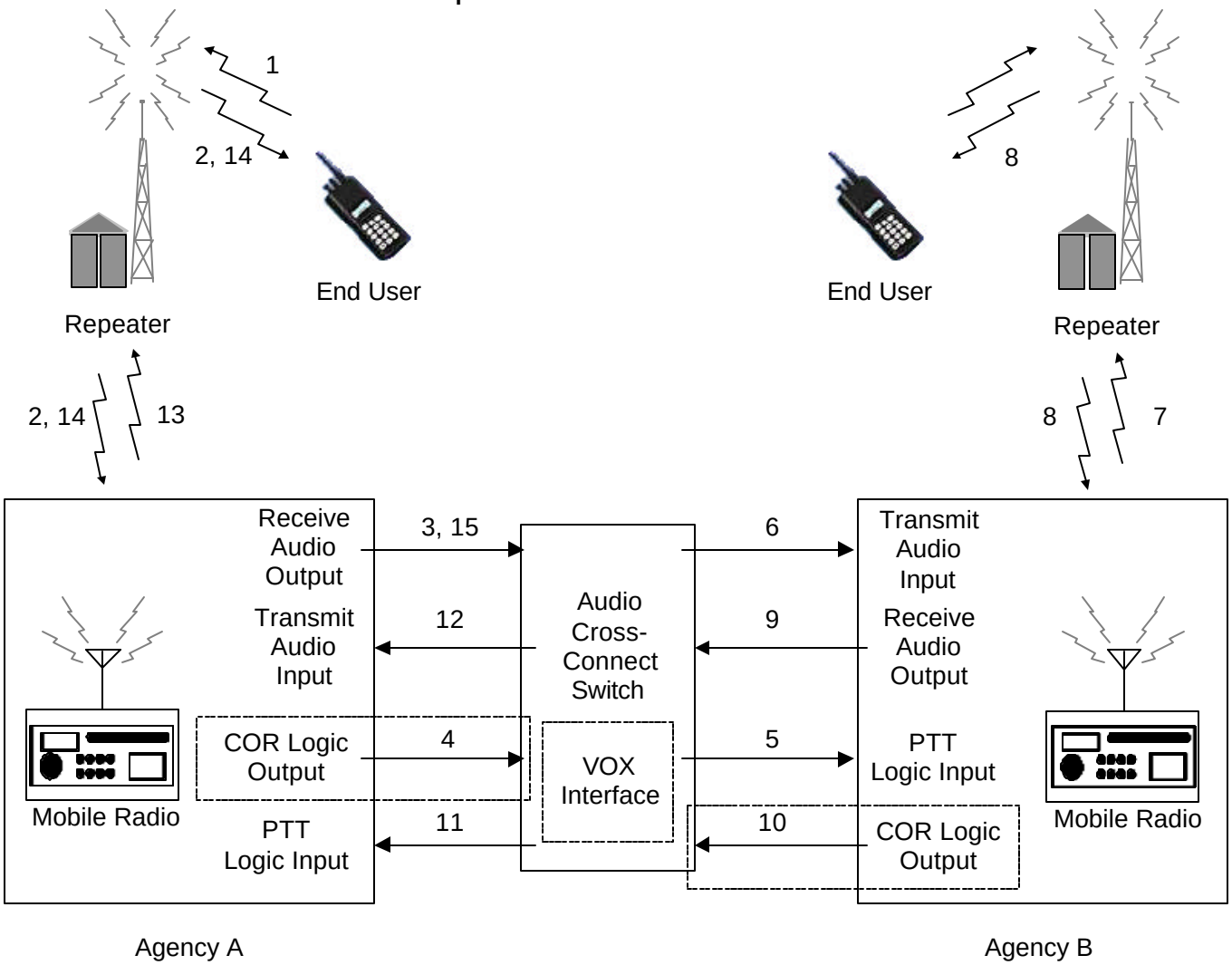

1. Agency A end user keys up
2. Agency A repeater keys up and holds for hang time
3. Agency A mobile radio receives end user audio
4. Audio cross-connect switch VOX detects received audio
5. Audio cross-connect switch activates Agency B mobile radio PTT
6. Received audio is passed to Agency B mobile radio
7. Agency B mobile radio keys up
8. Agency B repeater keys up and holds for hang time
9. Agency B mobile radio releases key and receives repeater carrier
10. Audio cross-connect switch VOX detects received audio
11. Audio cross-connect switch activates Agency A mobile radio PTT
12. Received audio is passed to Agency A mobile radio
13. Agency A mobile radio keys up
14. Agency A repeater keys up and holds for hang time
15. Agency A mobile radio releases key and receives repeater carrier

Figure 9. Field Optimization
Trunking Event Tones And PTT Oscillation

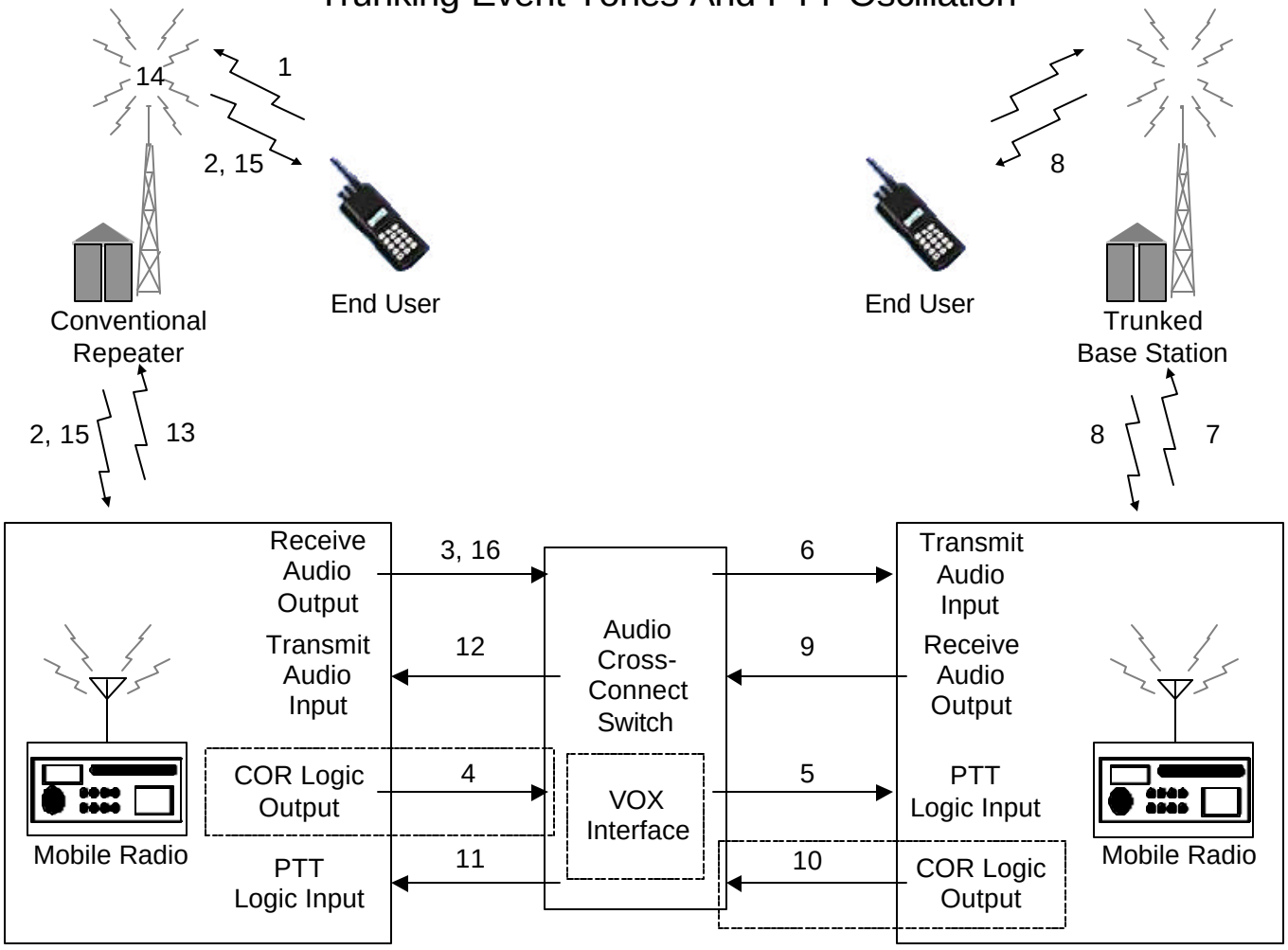

Agency A

Agency B

1. Agency A end user keys up and stays keyed
2. Agency A repeater keys up
3. Agency A mobile radio receives end user audio
4. Audio cross-connect switch VOX detects received audio
5. Audio cross-connect switch activates Agency B mobile radio PTT
6. Received audio is passed to Agency B mobile radio
7. Agency B mobile radio keys up, releases key, and waits for trunked channel
8. Agency B trunked base station sends trunked channel information
9. Agency B mobile radio emits talk permit tones
10. Audio cross-connect switch VOX detects talk permit tones
11. Audio cross-connect switch activates Agency A mobile radio PTT
12. Received audio is passed to Agency A mobile radio
13. Agency A mobile radio keys up
14. Mobile radio and end user transmissions compete or mix at repeater
15. Agency A repeater keys up with Agency B talk permit tones or distorted audio
16. Agency A mobile radio releases key and receives repeater transmission

APPENDIX A—ACRONYMS

ac	Alternating Current
BORTAC	Border Tactical
CAI	Common Air Interface
Cat5	Category 5
COR	Carrier-Operated Relay
COTS	Commercial Off-the-Shelf
dB	Decibel
dBm	Decibels referenced to 1 mW
dc	Direct Current
DEA	Drug Enforcement Administration
DoD	Department of Defense
DOJ	Department of Justice
EIA	Electronic Industries Alliance
FBI	Federal Bureau of Investigation
FDMA	Frequency Division Multiple Access
FM	Frequency Modulation
Hz	Hertz
IPT	Integrated Program Team
JWN	Justice Wireless Network
kHz	Kilohertz
MCV	Mobile Command Vehicle
MHz	Megahertz
ms	Millisecond
mV	Millivolt
mW	Milliwatt
NPRG	National Partnership for Reinventing Government
OTAR	Over-the-Air Rekeying
PC	Personal Computer
PL	Private Line
PMO	Program Management Office
POC	Proof of Concept
PP1	Patch Panel 1
PP2	Patch Panel 2
PSTN	Public Switched Telephone Network
PSWN	Public Safety Wireless Network
PTT	Push-To-Talk
RCS	Regional Communications System
RF	Radio Frequency
RMS	Root Mean Squared
TCS	Transportable Communications System
TIA	Telecommunications Industry Association
TSP	Terminal Strip Panel
UHF	Ultrahigh Frequency
USCS	U.S. Customs Service
V	Volt

VHF	Very High Frequency
VMR	Voice Modulation Recognition
VOX	Voice-Operated Transmit
W	Watt

APPENDIX B—TCS SYSTEM RESOURCE BUDGET

B.1. Introduction

The Transportable Communications System (TCS) integration involved design and analysis, hardware acquisition, hardware assembly, testing, site preparation, and installation. Custom machine work and custom interconnection cables were created for the unique mobile environment of the San Diego County Sheriff's Mobile Command One Search and Rescue (Mobile 1) vehicle and its mobile radios. A Terminal Strip Panel (TSP) was devised, as per Regional Communication System (RCS) recommendations, to enable easy, reliable radio interconnections. RJ-45 patch panels were chosen by San Diego Integrated Program Team (IPT) members to mate Mobile 1 and TCS radios with the JPS Communications ACU-1000 audio cross-connect switch.

The integration effort was done primarily by Booz·Allen & Hamilton and RCS, with PSWN oversight and San Diego IPT guidance. Listed in the following sections are the hardware and labor resources required to integrate the TCS. The following estimates are based on experience and the efforts involved in the integration effort. Significant design and analysis occurred before and during the TCS integration, because the TCS was an original initiative. To provide an accurate integration resource budget for subsequent TCS integration efforts, the estimates do not include the design, analysis and project support that subsequent efforts will not face. The labor estimates assume that all hardware and software are available to be assembled and installed in a typical mobile communications van.

B.2. Hardware Resources

Manufacturer/Integrator	Model Number	Description	Total $
Motorola	T99DX+090W ASTRO	ASTRO Spectra VHF High Power Mobile Radio	$ 3,886.90
Motorola	HLN6432C	ASTRO Spectra W5 Control Head	
Motorola	T99DX+093W ASTRO	ASTRO Spectra VHF High Power Mobile Radio	$ 5,331.69
Motorola	HLN6432C	ASTRO Spectra W7 Control Head	
JPS Communications	ACU-1000	ACU-1000 Modular Interconnect System	$ 17,373.13
Booz·Allen & Hamilton	TCS	Power, data and audio interconnection in mounting rack	$ 4,864.48
		Total:	**$ 31,456.20**

B.3. Labor Resources

Designation	Description	Hours
Rack Assembly	Assembly of open relay rack, shelves, casters, patch panels, terminal strip panels, and DC distribution panel	10
Cabling	Assembly of ACU-1000 and radio interconnection cables and power cables	85
Testing	Functional analysis and alignment of all hardware and software	40
Radio Integration	Analysis and design of ACU-1000 and radio interconnection	100
Site Preparation	Modifications to Mobile 1 vehicle for TCS installation, including power, RF and cabinet modifications	55
Staging	Analysis of TCS design and modifications to TCS for installation	10
Installation	Final installation of TCS into Mobile 1 vehicle	10
	Total:	**310**

APPENDIX C—TCS PARTS LIST

	Qty	Part Number	Mfg Part Number	Description	$/ea	Total
Motorola	1		T99DX+090W_ASTRO	ASTRO Spectra VHF High Power Mobile Radio	$ 3,719.52	
	1		HLN6432C	ASTRO Spectra W5 Control Head		
				Tax and shipping	$ 167.38	**$ 3,886.90**
	1		T99DX+093W_ASTRO	ASTRO Spectra VHF High Power Mobile Radio	$ 5,102.10	
	1		HLN6432C	ASTRO Spectra W7 Control Head		
				Tax and shipping	$ 229.59	**$ 5,331.69**
JPS Communications	1		ACU-1000	ACU-1000 Modular Interconnect System	$ 16,625.00	
				Tax and shipping	$ 748.13	**$ 17,373.13**
Machine Work				Machine work for custom radio brackets, associated hardware, and tax	$ 756.30	**$ 756.30**
Newark Electronics	1	90F8166	2M50TELS	Thomas & Betts/RDI 50-pin Telco female to screw terminals	$ 73.15	
	7	90F8166	2M50TELS	Thomas & Betts/RDI 50-pin Telco female to screw terminals	$ 65.00	
	4	29F288	2TK2-12	Thomas & Betts/RDI SnapTrak 12"	$ 3.71	
	1	91F1743	RR-1363-MG	Bud Open Relay 19" Rack	$ 155.92	
	2	92F2510	SA-1753-MG	Bud 20" deep, vented shelf for 19" rack	$ 71.00	
	1	92F2506	SA-1751-MG	Bud 15" deep, vented shelf for 19" rack	$ 62.00	
	2	93B5207	RC-7762PR	Bud pair of casters for RR-1363R-MG rack	$ 37.90	
	1	91F393	PA-1106-MG	6 RU blank filler panel for 19" rack	$ 40.11	
				Miscellaneous hardware, tax, and shipping	$ 57.36	**$ 1,076.18**
Black Box	1	10988		18"D Sliding Shelf for Open Relay Rack	$ 77.00	
	1	ECN16A-0500		500' Bulk RS-232 Cable, 16 conductor	$ 220.95	
	1	FA033-25PAK		DB15 Metal Hood, EMI/RFI, 25 pack	$ 164.95	
	6	FA810-100PAK		Crimp Pins, Male, 100 pack	$ 17.41	
	3	36064		3U Patch Panel Hinge Kit	$ 24.95	
				Miscellaneous cable, cable and rack hardware, tax, and shipping	$ 287.89	**$ 930.10**
Branch Data Comm	1	DCC2488/25V01		24-port, RJ-45, 4-Telco 50-pin female, T568B, 1RU, Cat5	$ 92.00	
	1	DCC4888/25V01		48-port, RJ-45, 8-Telco 50-pin female, T568B, 2RU, Cat5	$ 183.00	
	4	25PX5-180		5' Telco 50-pin 180° male on one end	$ 8.50	
	8	25PP5-180/180		5' Telco 50-pin 180° male to male	$ 14.50	
	12			2' RJ-45 Cat5 Patch Cables, red	$ 1.89	
	12			2' RJ-45 Cat5 Patch Cables, blue	$ 1.89	
				Miscellaneous cables, tax, and shipping	$ 287.89	**$ 758.25**
NewMar Power	1	DST		DC Distribution Panel with modifications	$ 775.45	
				Miscellaneous hardware, tax, and shipping	$ 105.14	**$ 880.59**
Wes-Garde	4	CA1-B0-34-640-111-C		CarlingSwitch 40A Circuit Breaker	$ 22.88	
				Shipping	$ 22.50	**$ 114.02**
Home Depot				Miscellaneous cable, cable and rack hardware, and tax	$ 75.45	**$ 75.45**
Branch Electric				Miscellaneous cable, cable and rack hardware, and tax	$ 65.01	**$ 65.01**
Communications Electronics of VA	2		30-80248L01	Motorola ASTRO Spectra high power mobile radio microphone jacks	$ 36.75	
				Tax	$ 3.31	**$ 76.81**
Arlington Electronics				Miscellaneous cable hardware and tax		**$ 7.32**
Gateway Electronics				Miscellaneous cable, cable hardware, and tax		**$ 124.45**
					Total:	**$ 31,456.20**