PUBLIC SAFETY
PSWN PROGRAM
WIRELESS NETWORK

Saving Lives and Property Through Improved Interoperability

Transportable Public Safety Radio Interoperability Unit (TPSRIU)

Pilot Implementation Report
Volume I

Final

September 2001

CONTENTS

Section 1 **Transportable Public Safety Radio Interoperability Unit—A Solution for Public Safety Wireless Interoperability**

Section 2 **Transportable Public Safety Radio Interoperability Unit—Users and Maintenance Manual**

Section 3 **Appendix A—Acronyms**

EXECUTIVE SUMMARY

This implementation report provides an overview of the processes coordinated by the Public Safety Wireless Network (PSWN) Program to integrate and install six Transportable Public Safety Radio Interoperability Units (TPSRIU).

The PSWN Program works with public safety agencies nationwide to help achieve interoperability—seamless, coordinated, integrated public safety wireless communications that promote safe, efficient protection of life and property. The PSWN Program works with the public safety community to improve the interoperability of wireless communications systems by promoting coordination and partnerships, seeking funding alternatives, advocating adequate public safety spectrum allocations and efficient spectrum use, supporting technical standards development, and fostering secure communications.

The development and implementation, for proof-of-concept purposes, of technical solutions for interoperability among public safety networks is one of the PSWN Program's main areas of activity. These solutions, which are put in place as pilot projects in regions throughout the country, are developed jointly by the PSWN Program Management Office (PMO) and public safety radio and operational personnel from the region. The individuals involved most directly in pilot system development and operation constitute the pilot test's Integrated Program Team, or IPT. IPT members focus the pilot effort and technical concept to be proven into a discrete, repeatable solution for an interoperability shortfall common among public safety agencies throughout the Nation. This approach allows the PSWN PMO to leverage the solution beyond the pilot region, thus benefiting the public safety community as a whole.

The TPSRIU contains a mobile radio for each participating agency that can communicate with its respective agency's fixed wireless infrastructure. An audio cross-connect switch is used to link these disparate public safety agency radio systems. The audio cross-connect switch selected for the system was the JPS Communications Audio Control Unit ACU-1000 Switching System.

The TPSRIU was designed based on lessons learned from the PSWN Program's San Diego case study and pilot test project. The San Diego case study focused on an assessment of interoperability in San Diego and Imperial counties. The primary recommendation from the case study was to implement a pilot test targeting a specific interoperability shortfall, namely, the need for a transportable interoperability solution supporting public safety agencies responding to emergency situations. To support this effort, the PSWN Program and the San Diego IPT developed the Transportable Communications System (TCS). The IPT decided the TCS would be installed in one of San Diego County's search and rescue vehicles. Features of the TCS included—

- Providing first response communications interoperability during the initial 24 to 48 hours of an emergency situation

- Supplementing or extending the reach of fixed infrastructure coverage

- Providing transportable communications backup with flexible system configuration

- Enhancing local, state, and federal interoperability during emergency situations and special events.

The TPSRIU, like the TCS, consists of three basic building blocks: radios to interconnect, an audio switch to provide the interconnections, and interface hardware (e.g., custom cables, terminal strips) to provide the physical connectivity supporting system operation. The essential difference between the TPSRIU design and the TCS design is in how each device is packaged to accommodate different applications. The TCS was designed to be mounted into a relay rack, which was to be permanently installed into a mobile command vehicle. The TPSRIU was designed to be mounted into transit cases that could be transported to wherever needed. Additionally, the TPSRIU was designed with a separate power source enabling operation where 110 volts (V) alternating current (AC) power is available.

Four mobile radios—a Justice Wireless Network (JWN) unit, a VHF high-band unit, a UHF unit, and an 800 megahertz (MHz) unit—are housed in the TPSRIU using the manufacturer-provided mounting brackets. Power is connected to the components of the TPSRIU via a rack-mountable direct current (DC) power distribution panel manufactured by NewMar Power. The NewMar Power distribution panel provides a single location to disconnect power, and it replaced the radio and control head fuses with circuit breakers. System ground was designed with a single point ground configuration using a ground bus bar connected to the rack. This system is designed such that technicians and operators have easy access to all interconnections.

The JPS Communications ACU-1000 provides the audio call patching and radio squelch logic control. The ACU-1000 is controlled with JPS Communications' console software, which can be loaded onto a personal computer equipped with Windows 95 or 98. The ACU-1000 can also be controlled through the keypad located on the front of the unit.

The TPSRIU was integrated from commercially available products and was fully tested in the Booz·Allen Wireless Engineering Laboratory prior to shipment to the required location. The units were tested for basic operation, and each DSP-1 module was aligned for unity gain throughout the TPSRIU system. TPSRIU systems were shipped to the following cities:

- Albuquerque, New Mexico
- Denver, Colorado
- Phoenix, Arizona
- Quantico, Virginia
- Salt Lake City, Utah
- San Diego, California.

The remainder of this report is organized into two volumes, which consist of the following sections:

Volume I:

- **Section One—Transportable Public Safety Radio Interoperability Unit—A Solution for Public Safety Wireless Interoperability.** This report serves as a primer for the TPSRIU technical solution to provide interoperability among public safety agencies. This report includes the basic, essential information needed to understand and implement the TPSRIU, and consequently, offers a resource for all public safety agencies interested in such a solution.

- **Section Two—Transportable Public Safety Radio Interoperability Unit Users and Maintenance Manual.** This document provides the basic information needed to operate and maintain the TPSRIU system. It supplements the equipment manuals offered by the vendors for each of the TPSRIU's components.

- **Appendix A—Acronyms.** This section lists all acronyms used in the report.

Volume II:

- **Section One—Introduction.**

- **Section Two—Interface Control (ICD) and TPSRIU Preliminary Design (TPDD) Documents.** The ICD identifies the external design parameters used during the initial design analysis. The TPDD provides documentation of the conceptual designs evaluated during the design process.

- **Section Three—As-Built Documentation.** This section contains the as-built documentation, including system drawings, component drawings, and configuration tables for the TPSRIU system.

- **Section Four—Procurement Documents.** This section contains the procurement documentation related to the TPSRIU project. Included are Other Direct Costs (ODC) memos, purchase orders, and credit card receipts.

- **Section Five—Manuals and Equipment Data Sheets.** This section contains the equipment specific documentation, including Motorola mobile data sheets, equipment manuals, and equipment warranty cards.

- **Appendix A—Acronyms.** This section lists all acronyms used in this report.

Report Tab—Insert document

2. TRANSPORTABLE PUBLIC SAFETY RADIO INTEROPERABILITY UNIT A SOLUTION FOR PUBLIC SAFETY WIRELESS INTEROPERABILITY

PUBLIC SAFETY
PSWN PROGRAM
WIRELESS NETWORK

Saving Lives and Property Through Improved Interoperability

Transportable Public Safety Radio Interoperability Unit (TPSRIU)

A Solution for Public Safety Wireless Interoperability

Final

September 2001

PREFACE

This report serves as a primer for one technical solution to provide interoperability among public safety wireless networks. The solution, known as Transportable Public Safety Radio Interoperability Unit (TPSRIU), is appropriate when certain public safety response scenarios would benefit from support by a mobile augmentation to the fixed infrastructure, designed to provide interconnection among different systems. This report provides the basic, essential resource for all public safety agencies interested in such a solution. More information on the TPSRIU, and other approaches for achieving interoperability, are available from the Public Safety Wireless Network (PSWN) Program, which sponsored and funded the development of the TPSRIU concept. The PSWN Program can be contacted by e-mail at information@pswn.gov or by telephone at 1-800-565-PSWN. The program's Web site at www.pswn.gov, provides a wealth of information regarding public safety wireless interoperability.

TABLE OF CONTENTS

1. INTRODUCTION 1

2. SYSTEM COMPONENTS 4

2.1 Rack Mount Transit Case 6
2.2 Power Distribution Panel 7
2.3 JPS ACU-1000 9
2.4 Sliding Radio Shelves 10
2.4.1 Motorola Radios 10
2.4.2 Radio Mounting & Radio Interface 10
2.5 Fixed Radio Shelf 12
2.5.1 Terminal Strip 12
2.5.2 External Direct Current Terminals 13
2.6 Radio Frequency and Power Interface Panel 13
2.7 Power Distribution Case 15

3. OPERATIONAL TESTING & INSTALLATION 16

3.1 System Preparation 16
3.2 System Alignment 16
3.2.1 System Test Equipment 16
3.2.2 RF Power Output Measurements 16
3.2.3 System Alignment Procedure 17
3.2 System Installation 20
3.2.1 Trailer Description 20
3.2.2 DC Power Wiring Description 21
3.2.3 System Operating Location Description 22
3.2.4 Web Harness System 24

4. CONCLUSIONS AND LESSONS LEARNED 25

APPENDIX A—AS-BUILT DOCUMENTATION A-1

APPENDIX B—AN EXCERPT FROM *TRANSPORTABLE COMMUNICATIONS SYSTEM—A SOLUTION FOR PUBLIC SAFETY WIRELESS INTEROPERABILITY* ... B-1

APPENDIX C—PARTS LISTING C-1

APPENDIX D—ACRONYMS D-1

LIST OF FIGURES

Figure 1 Transportable Public Safety Radio Interoperability Unit Conceptual Drawing..... 2
Figure 2 TPSRIU Power Box Conceptual Drawing 3
Figure 3 Front View TPSRIU 4
Figure 4 Rear View TPSRIU 5
Figure 5 Sliding Radio Shelves..... 11
Figure 6 Fixed Radio Shelf 12
Figure 7 Weidmuller Terminal Strip..... 13
Figure 8 DC Distribution Terminals 13
Figure 9 RF/Power Panel 14
Figure 10 DC Power Cable 15
Figure 11 Direct Current Power Case 15
Figure 12 TPSRIU Alignment Procedure Part 1 Steps 1–4 17
Figure 13 TPSRIU Alignment Part 1 Step 5..... 19
Figure 14 Government Furnished Equipment Trailer..... 21
Figure 15 Direct Current Power Cable Routing 22
Figure 16 TPSRIU Trailer Operational..... 23
Figure 17 TPSRIU Harness System..... 24
Figure A-1 TPSRIU System 1 DC Wiring Diagram A-1
Figure A-2 TPSRIU Systems 2–6 DC Wiring Diagram..... A-2
Figure A-3 TPSRIU Audio Cabling Diagram A-3
Figure A-4 RF/Power Panel Drawing..... A-4
Figure A-5 Power Box Power Panel Drawing..... A-5

LIST OF TABLES

Table 1 DST-DC Distribution Panel Configuration 8
Table 2 DST-20 DC Distribution Panel Configuration 8
Table 3 RF Output Measurements 17
Table 4 Trailer Equipment Specifications 21
Table A-1 Terminal Strip Interconnection A-6
Table A-2 TPSRIU Radio Matrix A-7

1. INTRODUCTION

The Public Safety Wireless Network (PSWN) Program works with public safety agencies nationwide to help achieve interoperability—seamless, coordinated, integrated public safety wireless communications that promote safe, efficient protection of life and property. The PSWN Program works with the public safety community to improve the interoperability of wireless communications systems by promoting coordination and partnerships, seeking funding alternatives, advocating adequate public safety spectrum allocations and efficient spectrum use, supporting technical standards development, and fostering secure communications.

The development and implementation, for proof-of-concept purposes, of technical solutions for interoperability among public safety networks is one of the PSWN Program's main areas of activity. These solutions, which are put in place as pilot projects in regions throughout the country, are developed jointly by the PSWN Program Management Office (PMO) and public safety radio and operational personnel from the region. The individuals involved most directly in pilot system development and operation constitute the pilot test's Integrated Program Team, or IPT. IPT members focus the pilot effort and technical concept to be proven into a discrete, repeatable solution for an interoperability shortfall common among public safety agencies throughout the Nation. This approach allows the PSWN PMO to leverage the solution beyond the pilot region, thus benefiting the public safety community as a whole.

The Transportable Public Safety Radio Interoperability Unit (TPSRIU) was designed and assembled based on lessons learned from the PSWN Program's San Diego case study and pilot project. The San Diego case study focused on an assessment of interoperability in San Diego and Imperial counties. The primary recommendation from the case study was to implement a pilot test targeting a specific interoperability shortfall, namely, the need for a transportable interoperability solution supporting certain public safety response situations. To support this effort, the PSWN Program and the San Diego IPT developed the Transportable Communications System (TCS). The IPT decided the TCS would be installed in one of San Diego County's search and rescue vehicles. Features of the TCS included—

- Providing first response communications interoperability during the initial 24 to 48 hours of an emergency situation
- Supplementing or extending the reach of fixed infrastructure coverage
- Providing transportable communications backup with flexible system configuration
- Enhancing local, state, and federal interoperability during emergency situations and special events.

The TPSRIU, like the TCS, consists of three basic building blocks: radios to interconnect, an audio switch to provide the interconnections, and interface hardware (e.g., custom cables, terminal strips) to provide the physical connectivity supporting system operation. The key difference between the TPSRIU design and the TCS design is in how each device is packaged to accommodate different applications. The TCS was designed to be mounted into a relay rack, which was to be permanently installed into a mobile command vehicle. The TPSRIU was designed to be mounted in transit cases that could be transported to wherever needed.

Additionally, the TPSRIU was designed with a separate power source enabling operation where 110 volts (V) alternating current (AC) is available. Figures 1 and 2 depict conceptual drawings of the TPSRIU system.

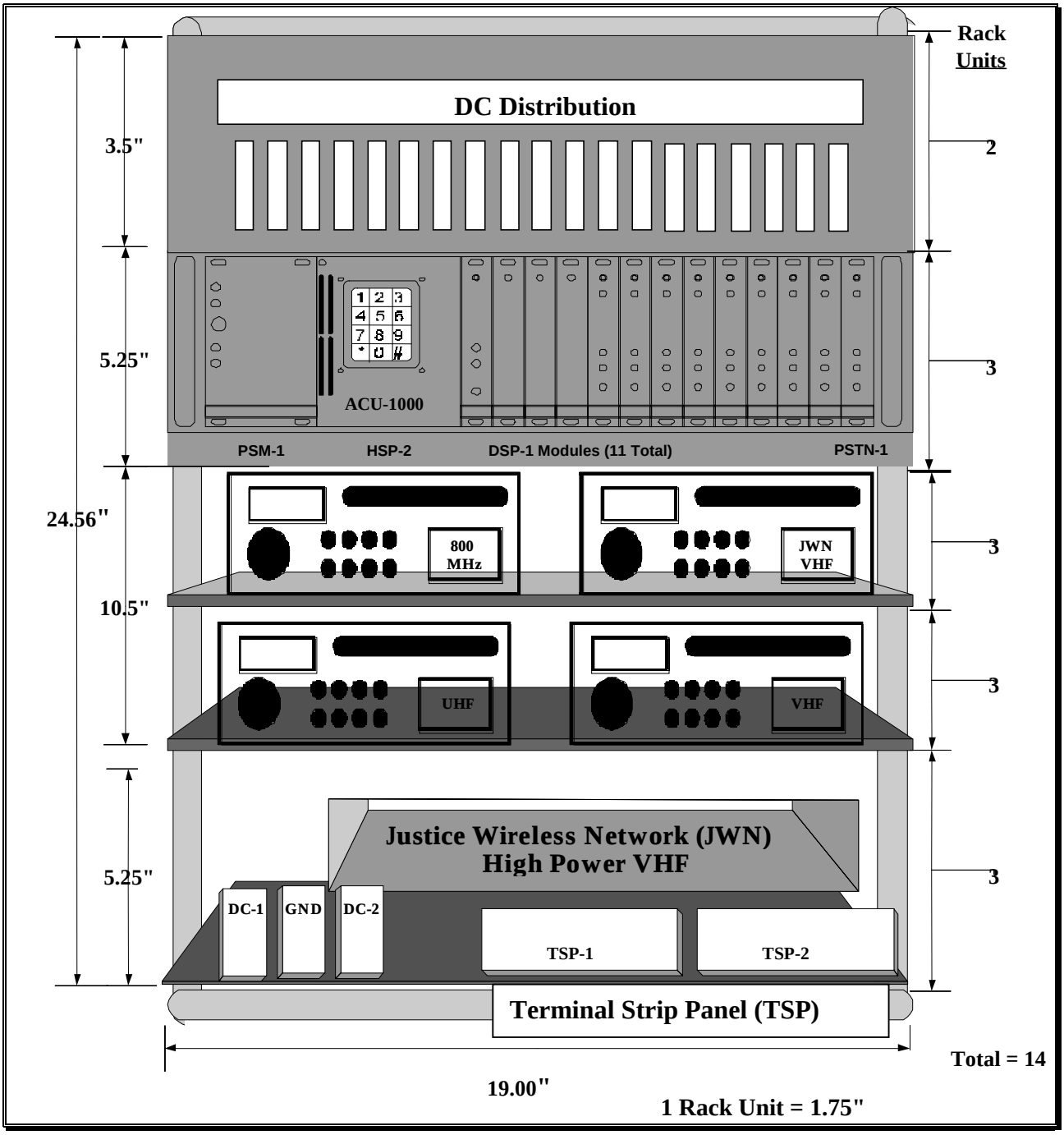

Figure 1
Transportable Public Safety Radio Interoperability Unit Conceptual Drawing

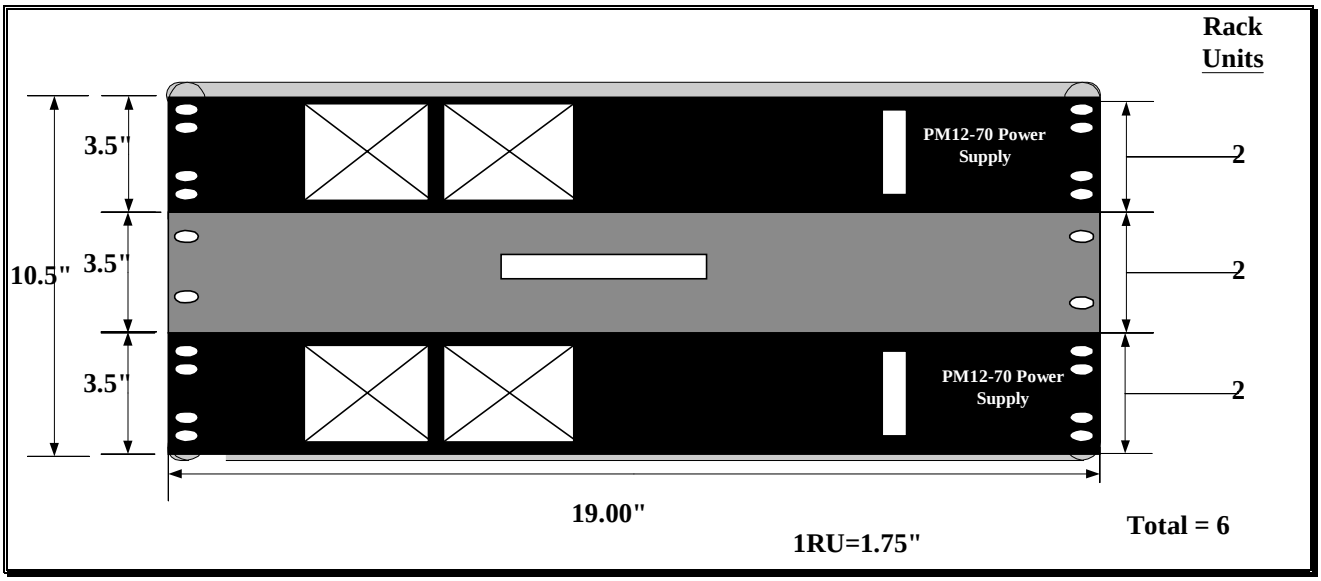

Figure 2
TPSRIU Power Box Conceptual Drawing

2. SYSTEM COMPONENTS

The Transportable Public Safety Radio Interoperability Unit (TPSRIU) integrates several commercial off-the-shelf (COTS) products into a public safety wireless interoperability solution appropriate for incident response where infrastructure does not provide needed coverage or required interoperability. Figures 3 and 4 show how the system components are mounted into two 19-inch rack-mounted transit cases.

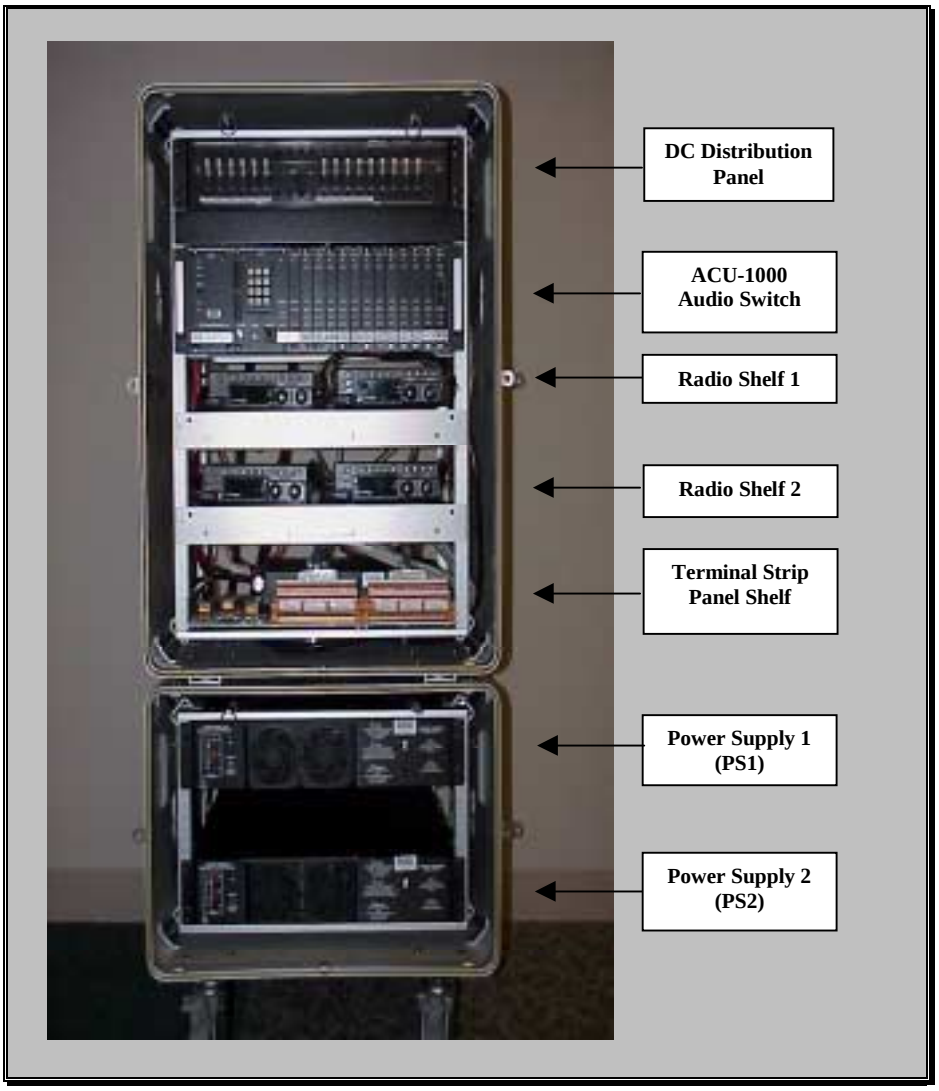

Figure 3
Front View TPSRIU

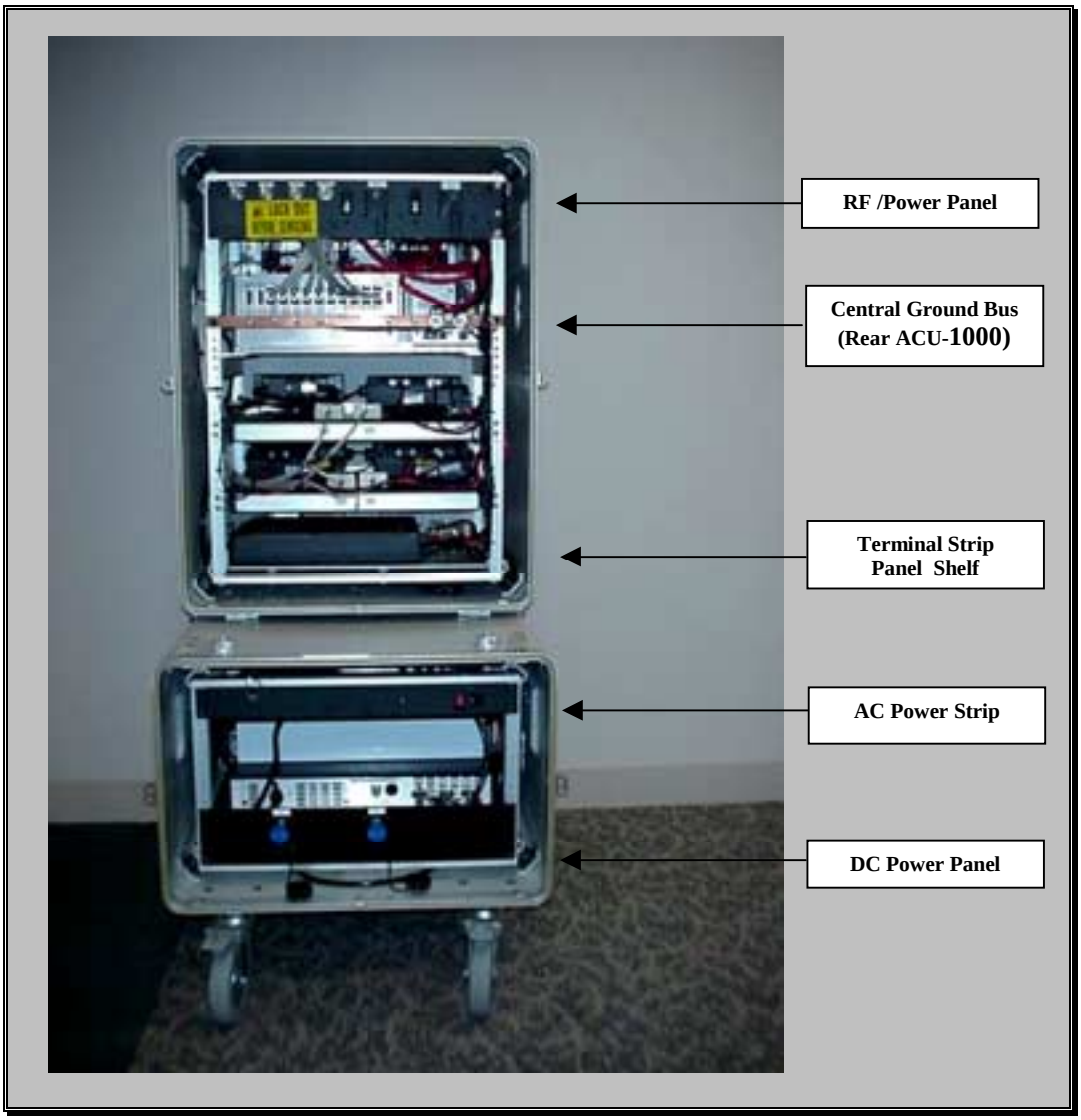

Figure 4
Rear View TPSRIU

The TPSRIU uses a JPS Communications ACU-1000 audio cross-connect switch with radio logic control. The JPS ACU-1000 is configured with 1 power supply module, 1 control processor module (CPM-2), 1 handset speaker prompt (HSP-2) module, 1 public switched telephone network (PSTN-1) module, and 11 digital signal processing (DSP-1) radio interface modules. DSP-1 modules 1 through 4 were interfaced to the following radios mounted in the TPSRIU: one very high frequency (VHF) (146–174 megahertz [MHz]) unit, one government band SmartNet trunk capable ultra high frequency (UHF) (403–433 MHz) unit, one SmartZone trunk capable 800 MHz unit, and one Justice Wireless Network (JWN) compatible VHF (146–174 MHz) unit. DSP-1 modules 5 through 7 were interfaced to terminal strip panel 1 (TSP-1). DSP-1 modules 8 through 10 were interfaced to TSP-2. DSP-1 module 11 is a spare module and is not interfaced to any other components.

Mounted in a second transit case is the TPSRIU power system. This power system allows operation of the TPSRIU when 110 V AC is available. The power system consists of two

Newmar PM12-70 power supplies rated at 70 amps continuous at 13.8 VDC. Power between the two transit cases is connected using custom-built power cables.

2.1 Rack Mount Transit Case

The TPSRIU system is housed in two, 19-inch rack mount transit cases manufactured by ECS Composites. The following criteria were used for case selection:

- **System Size—**The TPSRIU system design specification called for transit cases that were as small as possible, while still adequately protecting the equipment.

- **Operating Environment—**System design specifications called for the TPSRIU to be capable of transport in a high vibration environment. To meet this specification, a case designed with a shock absorption system was selected.

The ACU-1000, radios, and DC distribution panel were mounted into an ECS series 5314 case. The outer dimensions of this case are 22.77 inches wide by 23.05 inches deep by 28.46 inches high. The inner rack dimensions are 19.31 inches wide by 13.78 inches deep by 24.56 inches high. The inner rack is mounted on shock absorbing mounts specifically sized for the TPSRIU design. This case, with the equipment, weighs approximately 150 pounds.

The ECS series 5314 case was purchased with stacking feet, locking hasps, lift rings, a large pouch in the lid, a fixed shelf, and two sliding shelves. The sliding shelves house the Motorola Astro Spectra mobile mid/low power radios, as well as the high-power remote head, using the manufacturer-supplied mounting brackets. The fixed shelf houses the high-power radio, terminal strip panels, and DC power connections for additional radios.

The Newmar PM12-70 power supplies were mounted into an ECS series 5706 case. The outer dimensions of this case are 22.77 inches wide by 33.26 inches deep by 14.46 inches high. The inner rack dimensions are 19.31 inches wide by 24.00 inches deep by 10.56 inches high. The inner rack is mounted on shock absorbing mounts specifically sized for the power case design. This case, with the equipment, weighs approximately 100 pounds. The case was purchased with stacking feet, lift rings, locking hasps, casters, and a pouch in one lid.

The stacking feet allow for the ECS series 5314 case to be stacked on top of the ECS series 5706 case, as shown above in Figure 3. When stacked, the transit cases may be moved around as one system. The casters are removable and can be installed on either case as desired.

The ECS transit cases provide sufficient depth to protect the equipment but are shallow enough to allow easy programming of the radios and maintenance of the system. A challenge encountered with the series 5314 cases was that the sliding shelves' rails were machined incorrectly. This required shipping the sliding drawers back to the manufacturer, who resolved the problem. Another significant modification made to the sliding shelves was the removal of the locking mechanisms provided by the manufacturer. These were removed because of concerns that the locking mechanism would vibrate open and the shelf would slide out when the system was in transit. To correct this, a hole was drilled into the shelf faceplate so that the sliding shelf could be secured in place with a 10-32 rack mount screw.

Additional information on the transit cases can be found in the drawings included with each system, as well as on the vendor's Web site at www.ecscase.com.

2.2 Power Distribution Panel

Power is connected to all components of the TPSRIU using a rack-mountable 800-amp DC distribution panel manufactured by Newmar Power. The purpose of the power distribution panel is to provide a centrally located connection point for DC power that replaces the radio and control head fuses with easily reset circuit breakers.

Because the manufacturer discontinued the DST-DC model power panel, only the initial TPSRIU system was assembled using that particular model. TPSRIU systems two through six were configured with a Newmar model DST-20 distribution panel.

The DST-DC distribution panel was factory modified to provide a split bus (bus A and bus B), each controlled by a master 100 amp breaker mounted on the RF/Power Panel. This model of DC distribution panel normally ships from the manufacturer with a single bus but can be modified at the customer's request. In this case, the bus was modified for the system design. Two issues had to be considered when modifying the DST-DC bus. First, the modification makes breaker positions 9 and 10 unusable because of requirements for physical separation between the two buses. Second, the split bus modification required that breakers be mounted in positions 11 and 12 to provide adequate structural support for the second bus (bus B).

The DST-20 distribution panel is designed with a split bus (bus A and bus B), each controlled by a master 100A breaker mounted on the RF/Power Panel. Circuit breakers are installed from the front. Unlike the DST-DC distribution panel, all 19 breaker positions may be used.

Tables 1 and 2 outline the configurations of the DC distribution panels.

Table 1
DST-DC Distribution Panel Configuration

BUS	Breaker #	Amperage	Purpose
A	1	10	ACU-1000
	2	5	800 MHz Ignition Sense
	3	20	800 MHz Power
	4	5	VHF Ignition Sense
	5	20	VHF Power
	6	20	DC-1
	7		Empty
	8		Empty
	9		Split Bus Modification-Not Usable
	10		Split Bus Modification-Not Usable
B	11	5	JWN High Power VHF Remote Head
	12	40	JWN High Power VHF Power
	13	5	UHF Ignition Sense
	14	20	UHF Power
	15	20	DC-2
	16	Empty	
	17	Empty	
	18	20	Spare
	19	5	Spare

Table 2
DST-20 DC Distribution Panel Configuration

BUS	Breaker #	Amperage	Purpose
A	1	10	ACU-1000
	2	5	800 MHz Ignition Sense
	3	20	800 MHz Power
	4	5	VHF Ignition Sense
	5	20	VHF Power
	6	20	DC-1
	7		Empty
	8		Empty
	9		Empty
	10		Empty
B	11	5	JWN High Power VHF Remote Head
	12	40	JWN High Power VHF Power
	13	5	UHF Ignition Sense
	14	20	UHF Power
	15	20	DC-2
	16	10	Spare
	17	40	Spare
	18	20	Spare
	19	5	Spare

As-built wiring diagrams for both models of DC distribution panels are included in Appendix A. If equipment-specific information is needed, refer to the manufacturer's manuals, part numbers M-DST-DC and M-DST-20B, as well as the vendor's Web site at www.newmarpower.com.

2.3 JPS ACU-1000

The TPSRIU uses a JPS Communications ACU-1000 audio switch designed with 1 power supply module, 1 handset speaker prompt (HSP-2) module, 1 control processor module (CPM-2), 11 digital signal processing (DSP-1) modules, and 1 public switched telephone network (PSTN) module installed.

The power supply module is a single board module that plugs into the left-most slot of the ACU-1000. The ACU-1000 is provided with +13.8 V DC from the distribution panel and connected to breaker 1.

The HSP-2 module provides a means to locally monitor, configure, and control the ACU-1000 system. The user can monitor audio via an internal speaker, a set of headphones, or the handset provided. The handset includes a push to talk (PTT) switch, which allows the user to key cross-connected radios via the HSP-2 module. Module control and configuration is accomplished via a 3 by 4 keypad.

The CPM-2 module controls the entire chassis of the ACU-1000 via an internal high-speed serial bus. The CPM-2 module performs three primary functions in the ACU-1000. First, it requests and receives status from the other modules of the ACU-1000. Second, it sends commands to all other system modules, for example instructing a DSP-1 module to key a radio. Third, the CPM-2 module controls the routing of the audio from the other system modules to the ACU-1000 audio bus.

The DSP-1 module is a type of four-wire interface module. It is used to interface radios and other four-wire devices. This module offers three types of carrier operated relay (COR): hardware signal, voice modulation recognition (VMR), and voice operated transmit (VOX). The 11 DSP-1 modules in the TPSRIU system are configured for VOX. The first four DSP-1 modules interface directly to the radios mounted within the TPSRIU system. DSP-1 modules 5 through 10 are interfaced to terminal strips 1 and 2. DSP-1 module 11 was reserved as a spare.

The PSTN-1 module is located at the right-most slot of the ACU-1000. This module is the interface between the TPSRIU system and the telephone system. The PSTN-1 module contains one four-wire port for interfacing to four-wire phone lines or other devices, and two two-wire ports with front panel RJ-11C jacks for interfacing with PSTN lines or satellite equipment. Telephone systems that may be interfaced to the TPSRIU via the PSTN module are PSTN line, Private Automatic Branch Exchange (PABX) line, Inmarsat Terminal, or cellular telephones.

Appendix A contains as-built wiring diagrams and tables illustrating the interconnections of the DSP-1 modules. Refer to the ACU-1000 operations manual (5961-200200) and the vendor's Web site at www.jps.com for additional ACU-1000 information.

2.4 Sliding Radio Shelves

The following sections describe the components mounted on the sliding radio shelves.

2.4.1 Motorola Radios

The following radios are integrated into the TPSRIU:

- VHF programmable (146–174 MHz) Motorola ASTRO Spectra mid-power mobile radio with a W4 radio control head designed with the Telecommunications Industry Association/Electronic Industries Alliance (TIA/EIA)-102 (Project 25) Common Air Interface (CAI) and configured for conventional operation.

- Department of Justice (DOJ) JWN, VHF (146–174 MHz) Motorola ASTRO Spectra high-power mobile radio with a W4 remote mount radio control head designed with the TIA/EIA-102 CAI and configured for conventional operation, encryption, over the-air re-keying (OTAR), and multikeying.

- 800 MHz (806–870 MHz) Motorola ASTRO Spectra high-power mobile radio with a W4 control head designed with the TIA/EIA-102 CAI and configured for Motorola SmartZone Trunking and conventional operation.

- UHF programmable (403–433 MHz) Motorola ASTRO Spectra mid-power mobile radio with a W4 control head designed with the TIA/EIA-102 CAI, and configured for Motorola SmartNet Trunking and conventional operation.

RG-58/U cable is used for radio frequency (RF) terminations. The RF cable is terminated to N-Type connectors installed on the RF/power panel.

2.4.2 Radio Mounting & Radio Interface

Three mobile radios and one remote head were mounted on the TPSRIU system's two sliding shelves using the manufacturer-provided mounting brackets. Programming the four radios is accommodated easily from the rear of the TPSRIU system. When maintenance is required, the shelves slide out for easier access to system components. Shown in Figure 5 are photographs of the sliding radio shelves.

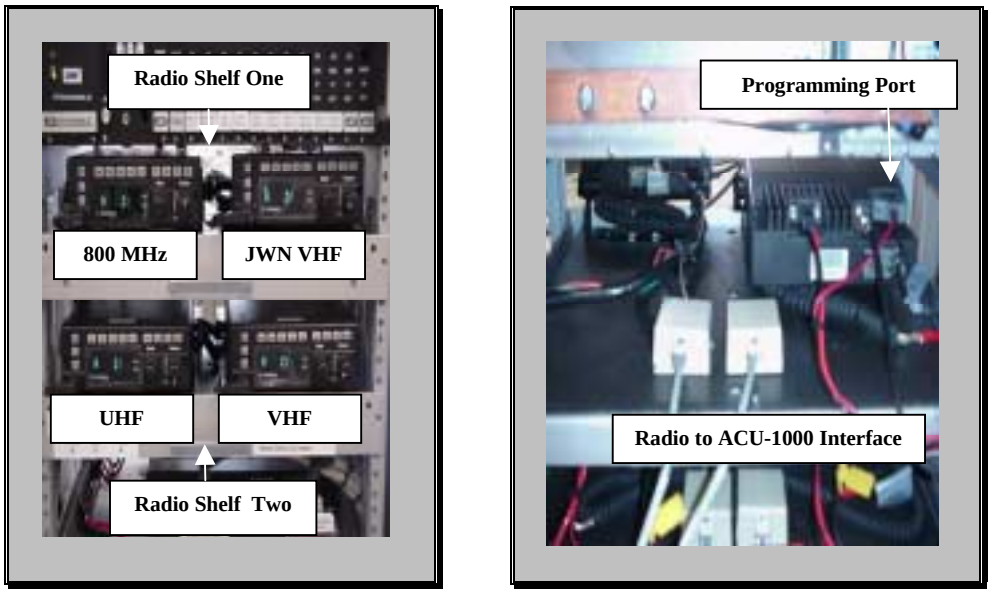

Figure 5
Sliding Radio Shelves

On Radio Shelf One rests the JWN high-power radio remote head as well as the 800 MHz radio. On Radio Shelf Two rests the VHF and UHF radios. Each radio is individually connected to an RJ-45 jack using a Motorola Spectra microphone cord. A cable, consisting of an RJ-45 and DB-15 connector, connects each radio to its respective DSP-1 module. Power for each radio is provided by the DC distribution panel and is routed through the TPSRIU case to the rear of each radio.

There are two methods for interfacing the Motorola radios to the ACU-1000. The first method requires internal modifications to the radio's soldered jumpers to provide transmit, receive audio, and PTT on the radio options accessory connector. The second method requires connecting to the radio's microphone connector for PTT and microphone audio (transmit audio). Speaker audio (receive audio) is provided by the accessory jack located on the rear of the radio. Of the two connection methods, the latter was the preferred approach because it provided the following advantages:

- No internal modifications of the radio were necessary.

- Motorola Astro Spectra radios could be temporarily removed, as needed.
  - Scenario One: An incident calls for two 800 MHz radios, but no UHF government radio. An 800 MHz Astro Spectra could be removed from a vehicle and mounted into the UHF radio position. After the appropriate type of antenna was connected and the radio was properly aligned, this radio could then be used for the duration of the event.
  - Scenario Two: The UHF radio malfunctions during system operations. A spare UHF radio could be removed from a vehicle and mounted into the malfunctioning UHF radio slot. The spare UHF radio could then be used until the primary UHF radio could be repaired.

Regardless of which method is used to interface the Motorola radios, **the volume control on the radio adjusts the audio level into the ACU-1000 DSP-1 interface modules.** If radios are changed out of the system, the receive audio levels will need to be optimized for proper system operation. System testing results indicated that placing the audio volume control at the mid-way setting provided the best audio level for the ACU-1000. This setting is a good starting point; however, depending on the radio used, the volume control may need to be adjusted further for optimal operation.

2.5 Fixed Radio Shelf

Mounted on the bottom of the Series 5314 transit case is a fixed shelf on which rests the JWN radio, TSP1 and TSP2, and two 20-amp DC power sources. Shown in Figure 6 are photographs of this shelf.

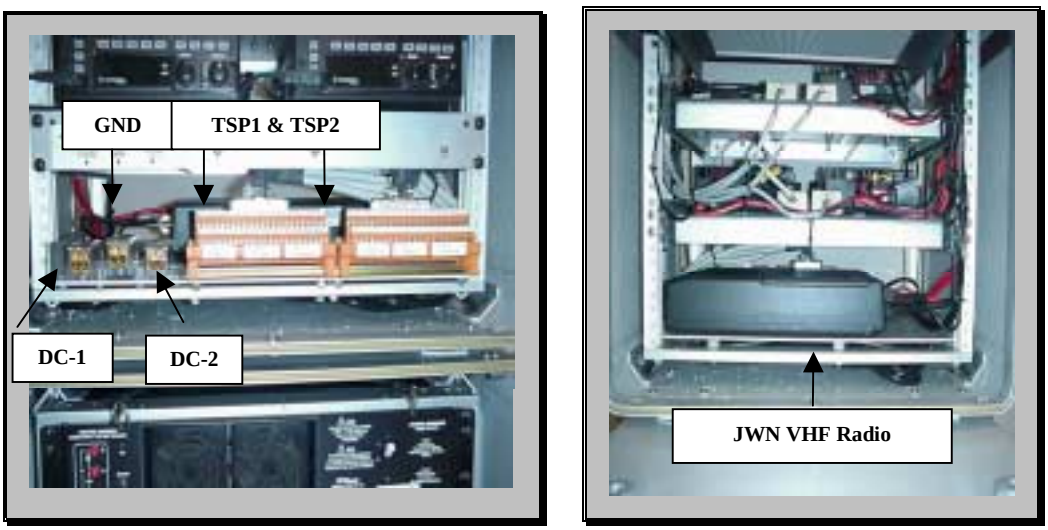

Front View **Rear View**

Figure 6
Fixed Radio Shelf

The high-power radio is mounted on the rear of the fixed shelf, using the manufacturer-provided mounting bracket. The remote head cable for this radio is routed through the TPSRIU case to the remote head resting on Radio Shelf One. Power for the radio is routed from the DC distribution panel through the case to the high-power radio. The high-power radio is connected to the DC distribution panel breakers number 11 and 12. Breaker 11 is a 5-amp breaker supporting the remote head, and breaker 12, which supports the radio, is rated at 40 amps. The programming cable for the high-power radio remains connected to the radio and attaches to the rack when not in use.

2.5.1 Terminal Strip

During the initial design analysis, one of the requirements identified was that the TPSRIU be capable of supporting ad hoc connections for various radios. To satisfy this requirement, two terminal strips were mounted in the TPSRIU system. These terminal strips allow for easy interconnection to the ACU-1000 when the switch manufacturer's interface cables are not available. Shown in Figures 6 and 7 are photographs of the terminal strips used.

Front View

Figure 7
Weidmuller Terminal Strip

The terminal strips are manufactured by Weidmuller Inc. The first terminal strip is interfaced to DSP-1 modules 5 through 7. The second terminal strip is interfaced to DSP-1 modules 8 through 10. The terminal strips were mounted to the bottom fixed shelf using a 6-inch track system provided by Weidmuller. A 36.5-inch long 25-pair cable, consisting of a male 50-pin Telco connector and 3 DB-15 connectors were used to interface each terminal strip to the ACU-1000. All 15 inputs and outputs on the DSP-1 modules appear on the terminal strips. Appendix A contains the as-built documentation for the terminal strip interconnections.

2.5.2 External Direct Current Terminals

A requirement to provide external DC power for up to two mid/low power mobiles was identified during the initial design analysis. To meet this requirement, three DC distribution terminals were mounted to the fixed shelf. Two of the distribution terminals are connected to the DC distribution panel breakers 6 and 15 (20-amp breakers) using 8-gauge wire. The third DC distribution terminal is connected to the common ground system bus using 8-gauge wire. Shown in Figure 8 is a photograph of the DC distribution terminals.

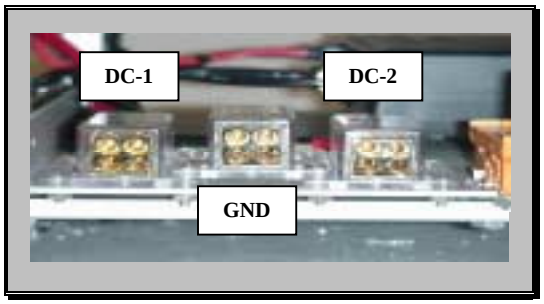

Front View

Figure 8
DC Distribution Terminals

2.6 Radio Frequency and Power Interface Panel

The RF and power panel serves two purposes in the TPSRIU system. First it provides fuse-protected interconnect points for 13.8V DC, derived from an external source. Any 13.8 V

source with sufficient current to operate the system, can be used, including power supplies and/or batteries. The second purpose is to provide the user with easily accessible RF connections for the four radios mounted in the system. N-Type bulkhead connectors were used for the antenna ports. Shown in Figure 9 is a photograph of the RF power panel interface.

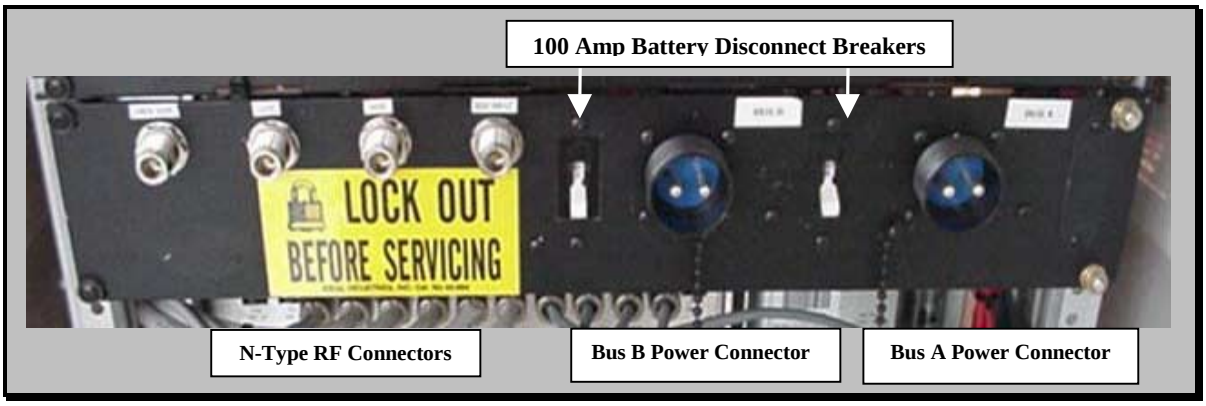

Figure 9
RF/Power Panel

DC power is connected to the TPSRIU using power connectors manufactured by Amphenol. The power is then routed from the back of the connector through a 100-amp battery disconnect breaker and to the DC distribution panel using 4-gauge wire. Each bus (bus A and bus B) is connected individually to a power connector. Any 13.8V DC source with sufficient current may be used to power the TPSRIU system. For this project, a battery bank and a power supply case were connected to provide power to the system. The battery bank is mounted in a government-furnished (GFE) equipment trailer. Refer to the testing and installation section of this report for more information on the battery bank installation.

The second source of power is provided by a separate power supply box. This box consists of two Newmar power supplies and the required interface connectors. The power box uses two 5-foot power cables to interconnect with the main system case. Connectors on each end of these cables are keyed to prevent users from accidentally mis-configuring the power connections. Shown in Figure 10 is a photograph of one of the custom-built power cables.

Figure 10
DC Power Cable

2.7 Power Distribution Case

The power distribution equipment was mounted into an ECS Composite series 5706 case. The power case consists of two Newmar PM12-70 power supplies, surge protected power strip, custom-built power connector panel, and a drawer. Each power supply is rated at 70 amps, and provides 13.8 V DC. The power supplies are connected to the power connectors mounted on a panel in the rear of the case with 4-gauge wire. The two custom power cables are used to provide a connection between the power box panel and the RF/power panel located on the main system case. Shown above in Figure 10 is a photograph of the custom-built power cable. Shown in Figure 11 are photographs of the Power Distribution Case.

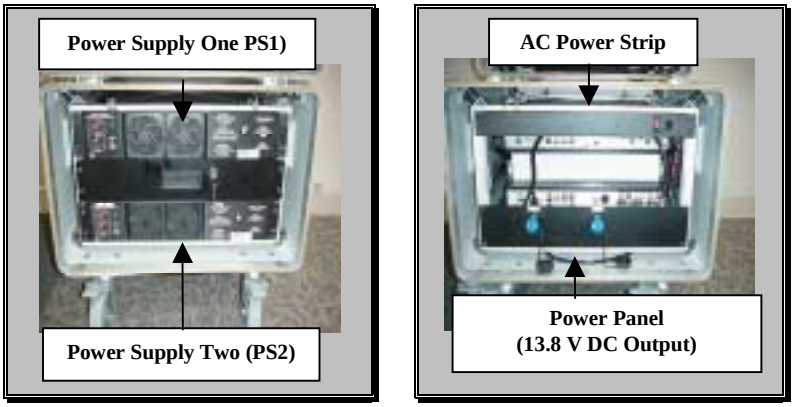

Front View **Rear View**

Figure 11
Direct Current Power Case

3. OPERATIONAL TESTING & INSTALLATION

The TPSRIU was integrated from commercially available products, shipped to regional representatives, and installed for field operations. Each system was tested for full functionality prior to shipment.

The JPS Communications ACU-1000 provided the audio call patching and radio logic control. Each ACU-1000 DSP-1 module and interconnected radio was aligned for unity gain throughout the TPSRIU before shipment. All four interconnected radios used in the testing were manufactured by Motorola and were either high-power or low/mid-power Astro Spectra mobile units.

3.1 System Preparation

The DSP-1 modules default configuration is for COR logic. Because none of the interconnected radios provided COR logic output, this parameter was changed to operate the radios using VOX.

The ACU-1000 was controlled via console software provided by JPS Communications. The software can be loaded using a PC with Windows 98; however, the ACU-1000 can also be controlled via its front keypad. Each DSP-1 module can be configured for proper operation via the console software. Pre-programmed call connections can be saved into non-volatile memory by inputting command "*36" on the front keypad.

3.2 System Alignment

3.2.1 System Test Equipment

The following equipment was used in TPSRIU system alignments:

- Motorola R-2670 with the Project 25 Frequency Division Multiple Access (FDMA) Test Set.
- Fluke Digital Multimeter.

3.2.2 RF Power Output Measurements

RF power output was measured and recorded for each of the radios mounted within the TPSRIU system. Shown in Table 3 are the manufacturer's specifications and the recorded measurements.

Table 3
RF Output Measurements

System Number	JWN VHF	UHF	VHF	800 MHz
Manufacturer Specification	50–110 Watts	20–40 Watts	25-50 Watts	30 Watts
1	46.3 W	35.2 W	50.5 W	26.5 W
2	47.0 W	35.2 W	51.5 W	26.3 W
3	48.0 W	33.7 W	50.3 W	27.0 W
4	46.0 W	38.0 W	51.2 W	27.3 W
5	49.1 W	33.7 W	50.9 W	25.6 W
6	46.0 W	34.2 W	50.7 W	26.1 W

3.2.3 System Alignment Procedure

TPSRIU system alignments were conducted in two parts, as illustrated in Figures 12 and 13. A single radio interface module was aligned first and then subsequently used as a reference for further radio interface module alignments.

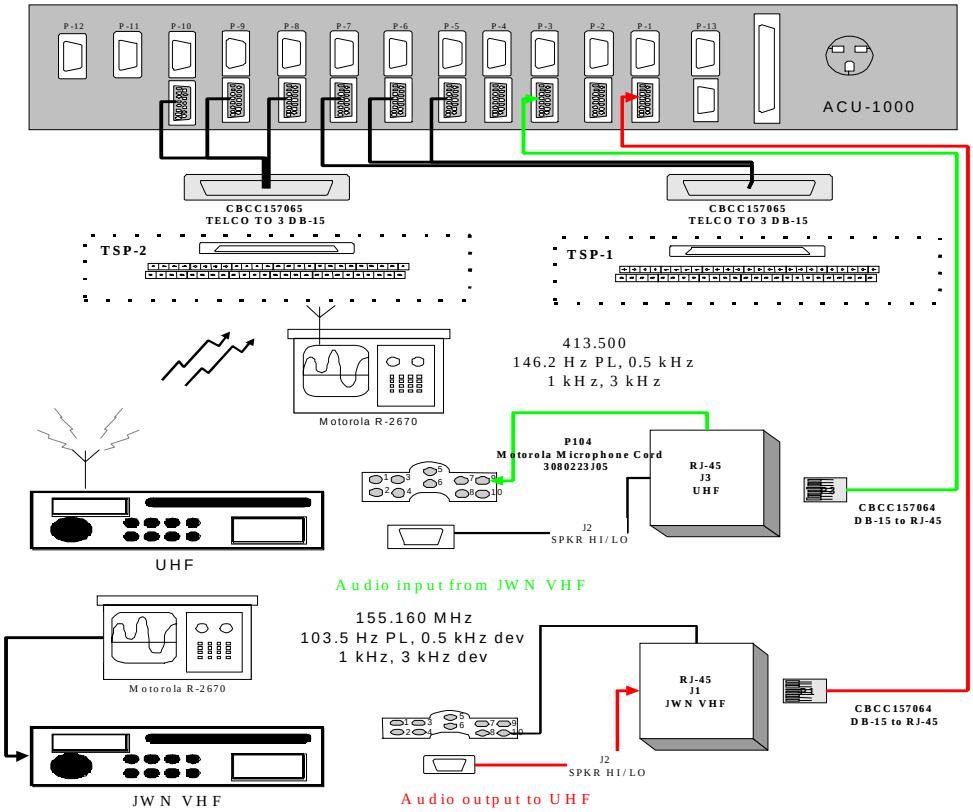

Figure 12
TPSRIU Alignment Procedure Part 1 Steps 1–4

- **Part 1**

  - **Step 1.** The JWN VHF radio was programmed for analog frequency modulation (FM) mode and was used as the reference radio for alignment of the TPSRIU system. The system alignment was performed with a 1 kilohertz (kHz) modulation signal. The carrier was set for a 3 kHz frequency deviation and the private line (PL) tone was set for a 0.5 kHz frequency deviation for a total deviation of 3.5 kHz, thus performing a more conservative system alignment than specified.

  - **Step 2.** The JWN VHF analog FM radio was set for 155.160 MHz transmit and 155.160 MHz receive with a 103.5 hertz (Hz) PL tone. A Motorola R-2670 test set provided an FM signal with a carrier frequency of 155.160 MHz. This frequency was modulated with a 1 kHz tone with 3 kHz deviation and a PL tone of 103.5 Hz with 0.5 kHz deviation. The signal was output at –70 decibels referenced to 1 milliwatt (dBm) through the RF/power panel and into the JWN VHF radio. This level allowed the radio to be fully quieted (> 20 decibel [dB] quieting), thereby eliminating noise as a component of any measured deviation. The audio output from the radio was measured to be 200 millivolts (mV), with the control head volume level set approximately mid-way.

  - **Step 3.** The DSP-1 modules were configured as follows:

    COR Type—VOX
    Full/Half Duplex—Half-Duplex
    VOX Threshold
    Explanation: VOX threshold is signal amplitude related. The higher the threshold, the louder the input must be to trip the VOX and open the squelch. DSP-1 module may be set from 0, which is a low threshold (highest sensitivity), to 3, which is a high threshold (lowest sensitivity).
    Setting: 1=Med1.
    Hangtime Threshold
    Explanation: Hangtime keeps the audio path enabled for an adjustable duration after the moment when speech is no longer detected, preventing the audio from being muted between syllables or during pauses in speech. The hangtime duration may be set from 0=175 milliseconds (ms) to 7=1.575ms.
    Setting: 1=375 ms.
    Audio Delay
    Explanation: The DSP-1 module can add an adjustable delay to the module's output audio. The adjustable audio delay prevents the loss of the audio that is received before the detection takes place and audio gates can be opened to send this audio on to other modules. The audio delay parameter may be set from 0=10 ms to 7=97 ms.
    Setting: 1=60 ms.
    COR Sampling
    Explanation: The radios connected to the ACU-1000 do not provide a COR logic input.
    Setting: Disabled

Testing revealed that Module 1's receive level was optimal at the ACU-1000 program software setting of 6; it corresponded to –12 dBm as specified by JPS, given the input 200 mV signal from the JWN VHF radio.

– **Step 4.** Interconnection with the analog FM UHF radio, module 3, allowed the transmit level of module 3 to be aligned. It was determined that a transmit level setting of 5 was optimal; it corresponded to –4 dBm as specified by JPS. The transmit level setting of 5 provided an 82 mV signal into the UHF radio. The UHF radio was set for 413.5 MHz transmit and 413.5 MHz receive with a 146.2 Hz PL tone. A Motorola R-2670 test set received the FM signal and demodulated it to measure the deviation present in the resultant baseband signal. The signal deviation for the modules, tested as described, was measured at 3.5 kHz, thereby verifying that the complete audio and RF TPSRIU system path was aligned for proper operation, with unity gain.

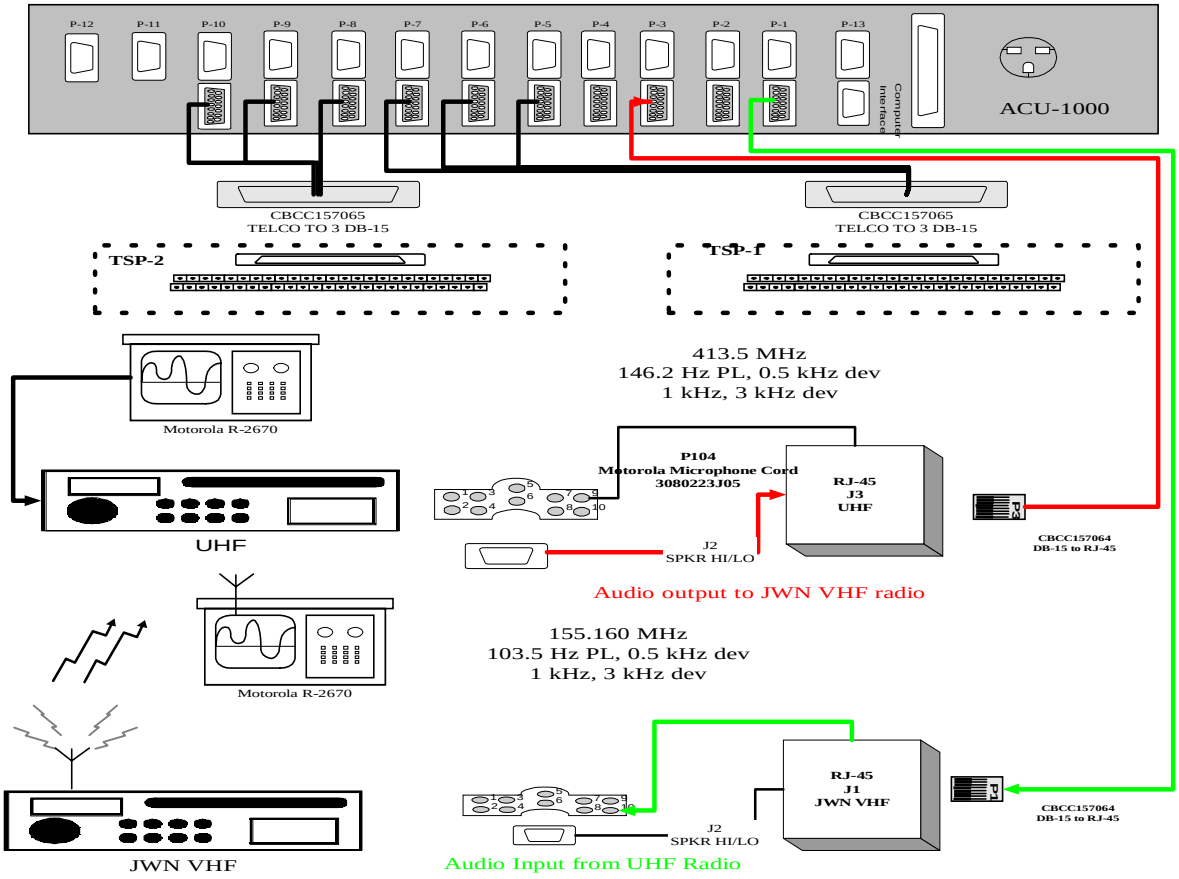

Figure 13
TPSRIU Alignment Part 1 Step 5

– **Step 5.** The process was reversed and the UHF radio provided audio into DSP-1 module 3, through the ACU-1000 via a call connection with DSP-1 module 1, and into the JWN VHF radio (refer to Figure 13 above). A Motorola R-2670 test set provided an FM signal with a carrier frequency of 413.500 MHz, which was modulated with a 1 kHz tone with 3 kHz deviation and a PL tone of 146.2 Hz

with 0.5 kHz deviation. The signal was output at –70 dBm through the RF/Power Panel and into the UHF radio. This level allowed the radio to be fully quieted (> 20 dB quieting), thereby eliminating noise as a component of any measured deviation. With the control head volume level set approximately mid way the audio output from the radio was measured to be 200 mV. The transmit level of the JWN VHF DSP-1 module was optimal at level setting 4; it corresponded to –8 dBm, as specified by JPS, with a measured 92 mV. A Motorola R-2670 test set received the FM signal and demodulated it to measure the deviation present in the resultant baseband signal. The signal deviation for the modules tested was measured to be at 3.5 kHz, thereby verifying that the complete audio and RF TPSRIU system path were aligned for proper operation, with unity gain.

- **Part 2.** Once transmit and receive levels were set for module 1 and module 3 as described, the levels for modules 2 and 4 were set. To verify the proper operation of modules 5 through 11, a fifth radio was attached to the system via the terminal strip panel. To achieve overall system alignment, each DSP-1 module was tested for proper level settings. It was determined that receive levels were optimal at a level setting of 4. As described above, each module and radio pair was tested for—

  – Radio control head volume level setting to achieve the target (~188 mV) audio into the radio's corresponding DSP-1 module

  – The DSP-1 module transmit level setting to achieve the target (~80 mV) into the corresponding radio.

  Each radio's control head volume level, and its associated module's transmit level, was measured. Cross-talk testing was done to confirm that no cross talk was detected between ACU-1000 modules or radio interconnections.

3.2 System Installation

The following section describes the installation of the TPSRIU system into the GFE trailers. This section consists of four parts: one describing the trailer, a second describing the physical wiring of the installation, a third describing the system's operational location in the trailer, and a fourth describing the web-harnessing system.

3.2.1 Trailer Description

The TPSRIU systems were installed into trailers furnished by the Government. During the initial design analysis, a site visit to survey a trailer was conducted at FBI Headquarters Quantico, Virginia. Shown in Figure 14 is a picture of the type of trailer used for the TPSRIU installation.

Figure 14
Government Furnished Equipment Trailer

The following areas were evaluated during the site survey:

- TPSRIU power requirements
- Heating, ventilation, and air conditioning (HVAC) capacity of the trailer
- Optimal layout of the TPSRIU rack equipment
- Floor loading considerations.

Listed in Table 4 are the specifications of the trailer, as identified during the site visit.

Table 4
Trailer Equipment Specifications

Equipment	Rating
Battery Bank	510 Amp Hours
Generator	7 kVa
Power Inverter	2,500 Watts
Air Conditioning	13.5 K BTU

3.2.2 DC Power Wiring Description

The TPSRIU system is connected to the trailer's battery bank. This method of providing power to the system was selected because it provides two advantages. First, the TPSRIU system does not add an additional AC power requirement to an already heavily loaded generator. Second, in the event the generator fails, the TPSRIU system could be powered by the batteries for approximately 24 hours. When 110 VAC is available to power the trailer, the user has the option to power the system off the battery bank, or use the power box provided.

The TPSRIU requires two separate DC input connections. The cables are connected to the batteries and routed along a cable trough that forms where the wall meets the ceiling. At the rear of the trailer, the power cables are terminated with Amphenol power connectors, which mate

to the system's RF power panel at bus A and bus B. In-line fuses are installed at the battery end to prevent damage to the equipment should the power circuits be short-circuited. The system grounds are connected to the central grounding point for the trailer. This grounding point is located on the floor between the generator and the telescoping mast. Shown in Figure 15 are photographs of the power inverter, battery bank, central ground, and cable trough, respectively. **Users should note that when the TPSRIU system is powered from the battery bank, the power inverter must be on and charging.**

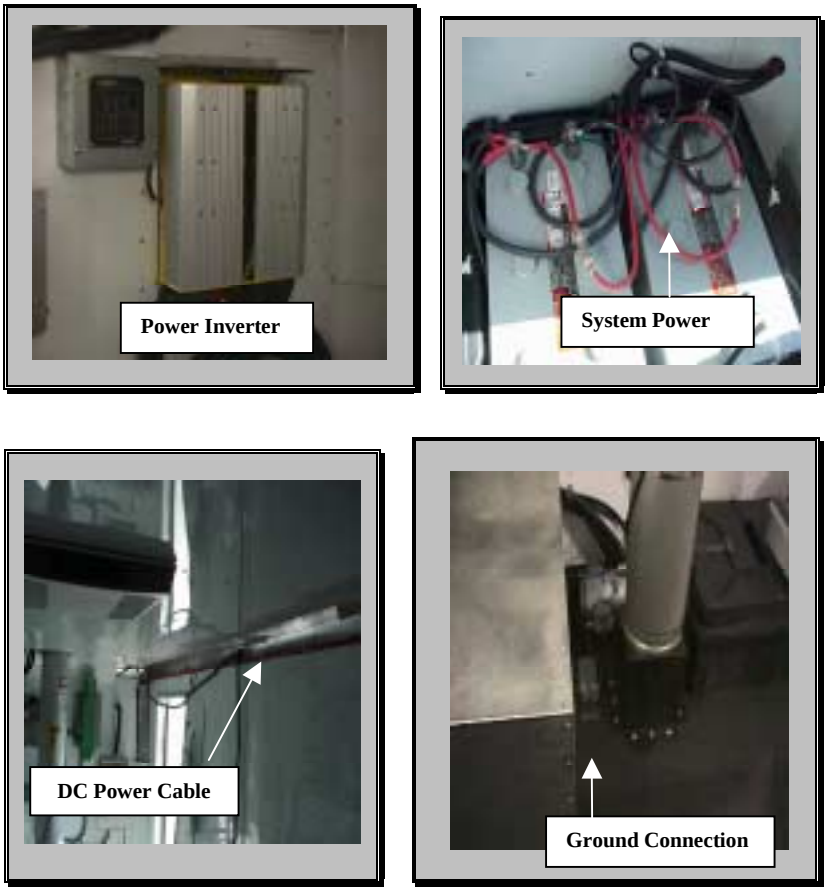

Figure 15
Direct Current Power Cable Routing

3.2.3 System Operating Location Description

The TPSRIU system wiring was configured to enable operation of the system from the rear of the trailer. To connect the TPSRIU to its power source, the two cases are moved from their stowed positions and set up in their stacked configuration. DC power is connected to the system via the RF/power panel. Each cable is keyed to ensure that power is connected properly. Shown in Figure 16 are photographs of the TPSRIU system as it would be set up and operated in the trailer. Users are cautioned never to transport the system in the stacked configuration.

Front View

Rear View

Figure 16
TPSRIU Trailer Operational

3.2.4 Web Harness System

The ECS series 5314 case is secured at the front of the trailer, against the wall adjacent to the side door. The two tie-down points are mounted to the floor, approximately 4 inches from the wall using 10-32 screws. The harness is then latched into the tie-down points, and the ratchet type straps are adjusted to hold the system securely in place. Shown in Figure 17 are photographs of the transit case harnessing and tie-down points.

The ECS series 5706 case harness employs the same tie-down mechanism as does the series 5314 case. Unlike the series 5314 case, this case is placed vertically, on its lid, at the end of the workbench located closest to the front of the trailer. The tie-down points for this case are mounted to the floor approximately 4 inches and 35 inches from the wall, using 10-32 screws. The harness is then latched into the tie-down points, and the ratchet type straps are adjusted to hold the system securely in place.

Figure 17
TPSRIU Harness System

4. CONCLUSIONS AND LESSONS LEARNED

The TPSRIU has successfully demonstrated a mobile public safety wireless interoperability solution. Integrating the JPS ACU-1000 requires planning and engineering for proper radio interconnection.

Listed below are some of the key lessons learned from this pilot project:

- Each ACU-1000 module in the TPSRIU have been adjusted for optimal transmit and receive levels for the interconnected radios. User-selectable ACU-1000 module parameters are critical to proper system operation. The levels described here serve only as baseline recommended levels. Module transmit and receive levels may vary slightly as the unit warms up, or as different DSP-1 modules are connected to radios with different impedance. The VOX settings must be optimized for field conditions during field optimization.

- The lead time for delivery for some system components was nearly 3 months. When planning for projects such as this, timelines must be established based on the projected lead times. Long lead-time items need to be purchased as soon as possible to avoid unnecessary project delays.

- On the whole, the selected cases worked well for this project. A significant challenge encountered with the Series 5314 case (i.e., the larger case) was with the sliding shelves. The slide rails for the shelves were not machined correctly for the application, requiring the shelves to be shipped back to the manufacturer for rework. When developing project timelines, unforeseen issues associated with the manufacturing process should be considered.

- There was a concern that the locking mechanism installed by the manufacturer on the sliding shelves was inadequate for the application. Although not tested specifically, there was concern that the locking mechanism might vibrate loose, allowing the shelf to slide out when the system was in transit. To correct this, a hole was drilled into the shelf faceplate so that the sliding shelf could be secured in place with a 10-32 rack mount screw.

- The volume control on the radios adjusts the receive audio into the ACU-1000. If the user encounters problems with receive levels, the volume control should be checked before performing further troubleshooting.

- During TPSRIU system testing, it was determined that placing the audio volume control at the mid-way setting provided the correct audio level for the ACU-1000. Note that this setting is simply a good starting point; finding the best setting depends on the radio used. The volume control may need to be adjusted further for optimal operation.

- The 800 MHz radios were purchased without a trunking option. This error was identified upon installation of the first system in Salt Lake City, Utah. The 800 MHz radios used for this type of system need to be purchased with trunking because the

majority of 800 MHz is trunked. This issue was addressed by purchasing flash upgrades for the radios purchased and installing SmartZone trunking feature locally.

- Operational and functional requirements should be identified for each location to ensure adequate channel capacity is available in all radios assigned. Upon programming their respective radios, San Diego and Salt Lake City discovered the 128 channels available in their 800 MHz radios were insufficient, and that they required radios capable of supporting 255 channels. The insufficient channel capacity would have forced these field offices to limit the number of required interoperability talkgroups programmed into their respective radios. To resolve this issue, each field office's 800 MHz (128 channel) radios were replaced with radios capable of 255 channels.

- System testing identified radio control head incompatibility issues between FBI JWN radios and the TPSRIU's JWN radios. Although the radios are compatible operationally, the different styles of control heads render them incompatible for hot swapping purposes. The FBI uses high-power radios with the W3 control head. The TPSRIU radios were purchased with W4 control heads. It is important to consider interviewing field personnel during the design analysis to avoid such problems.

- Once all the issues associated with the size and fit of the web-harnesses were resolved they worked well. The process for getting the nettings to fit correctly, however, could have been made much smoother if empty cases had been shipped to the manufacturer for use during preliminary design.

- Using the FBI facility at Quantico, Virginia, to pre-wire the trailers saved significant time and resources. In 2 days an installation team was able to accomplish the same amount of work that would have taken 9 days to accomplish in the field. Performing the pre-wiring meant that only two persons were required to complete the field installation rather than the three persons that would have been required to accomplish a full in-field installation. Pre-wiring the trailers required disassembly of the trailer panels and routing the wire through the trailer to the battery bank. In addition, installing the tie-down points in the floor requires two people, one person underneath the trailer and the other person inside the trailer.

- Pre-coordination with the personnel in the field prior to field installation trips is imperative to ensure that installations are completed smoothly.

- Coordination with the local jurisdictions receiving the systems may be desired to ensure that the right types of radios are mounted into the system. The need for this coordination was discovered upon installation of the Albuquerque, New Mexico, system. The 800 MHz Motorola SmartZone radio cannot interface with the local M/A-Com trunked radio system. To solve this problem a field modification is being made to interface an M/A-Com radio to the TPSRIU system.

Appendix B contains an excerpt from the PSWN document entitled *Transportable Communications System: A Solution for Public Safety Wireless Interoperability*. This document, in its entirety, described the implementation of the TCS in San Diego, California. The included

excerpt is one section of that report, describing some of the operational lessons learned. This information is provided as reference material, because it still is applicable when using the TPSRIU system.

APPENDIX A—AS-BUILT DOCUMENTATION€

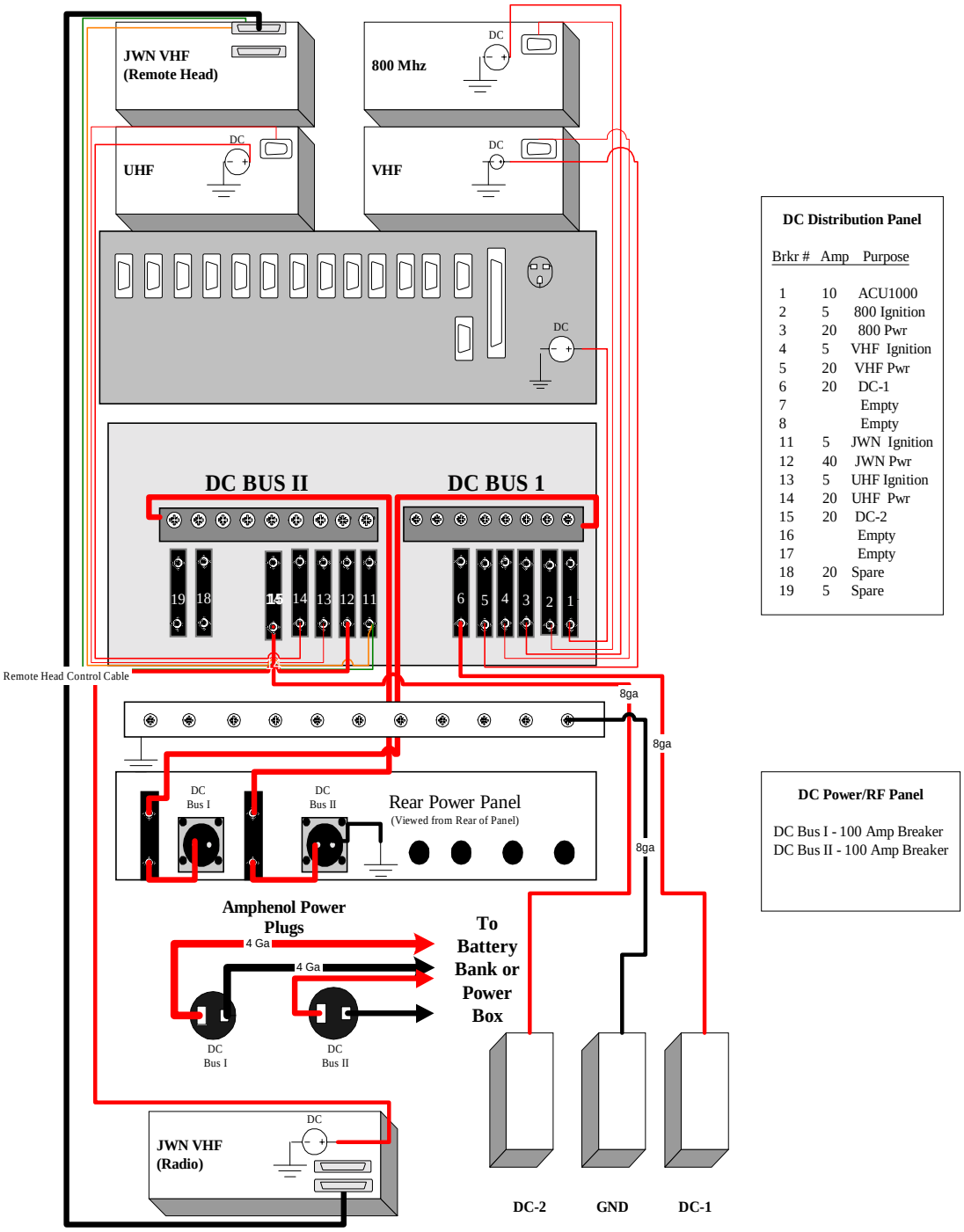

Figure A-1
TPSRIU System 1 DC Wiring Diagram

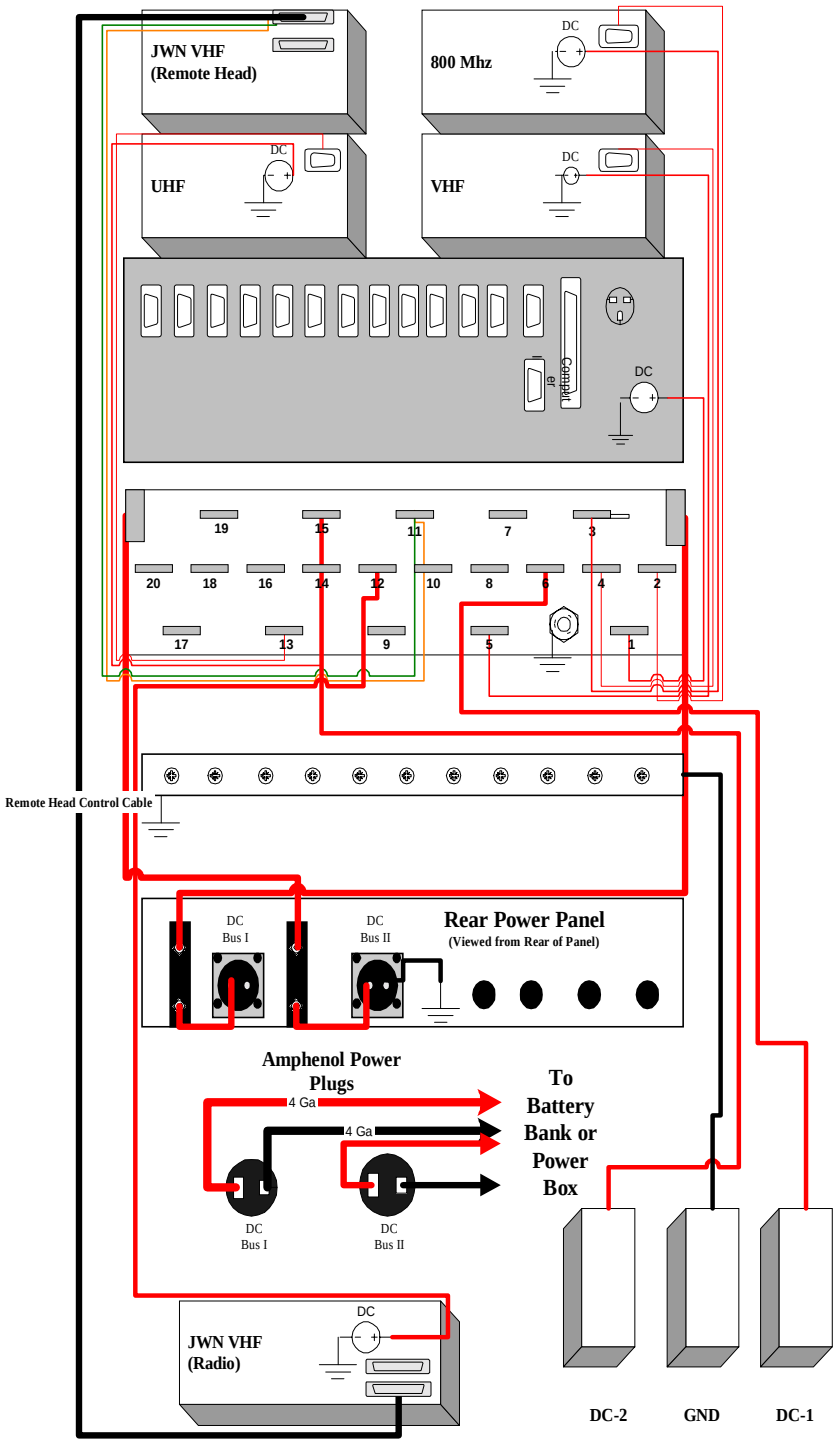

DC Distribution Panel

Brkr #	Amp	Purpose
1	10	ACU1000
2	5	800 Ignition
3	20	800 Pwr
4	5	VHF Ignition
5	20	VHF Pwr
6	20	DC-1
7		Blank
8		Blank
9		Blank
10		Blank
11	5	JWN Ignition
12	40	JWN Pwr
13	5	UHF Ignition
14	20	UHF Pwr
15	20	DC-2
16	10	Spare
17	40	Spare
18	20	Spare
19	5	Spare
20	5	Spare

DC Power/RF Panel

DC Bus I - 100 Amp Breaker
DC Bus II - 100 Amp Breaker

Figure A-2€
TPSRIU Systems 2–6 DC Wiring Diagram€

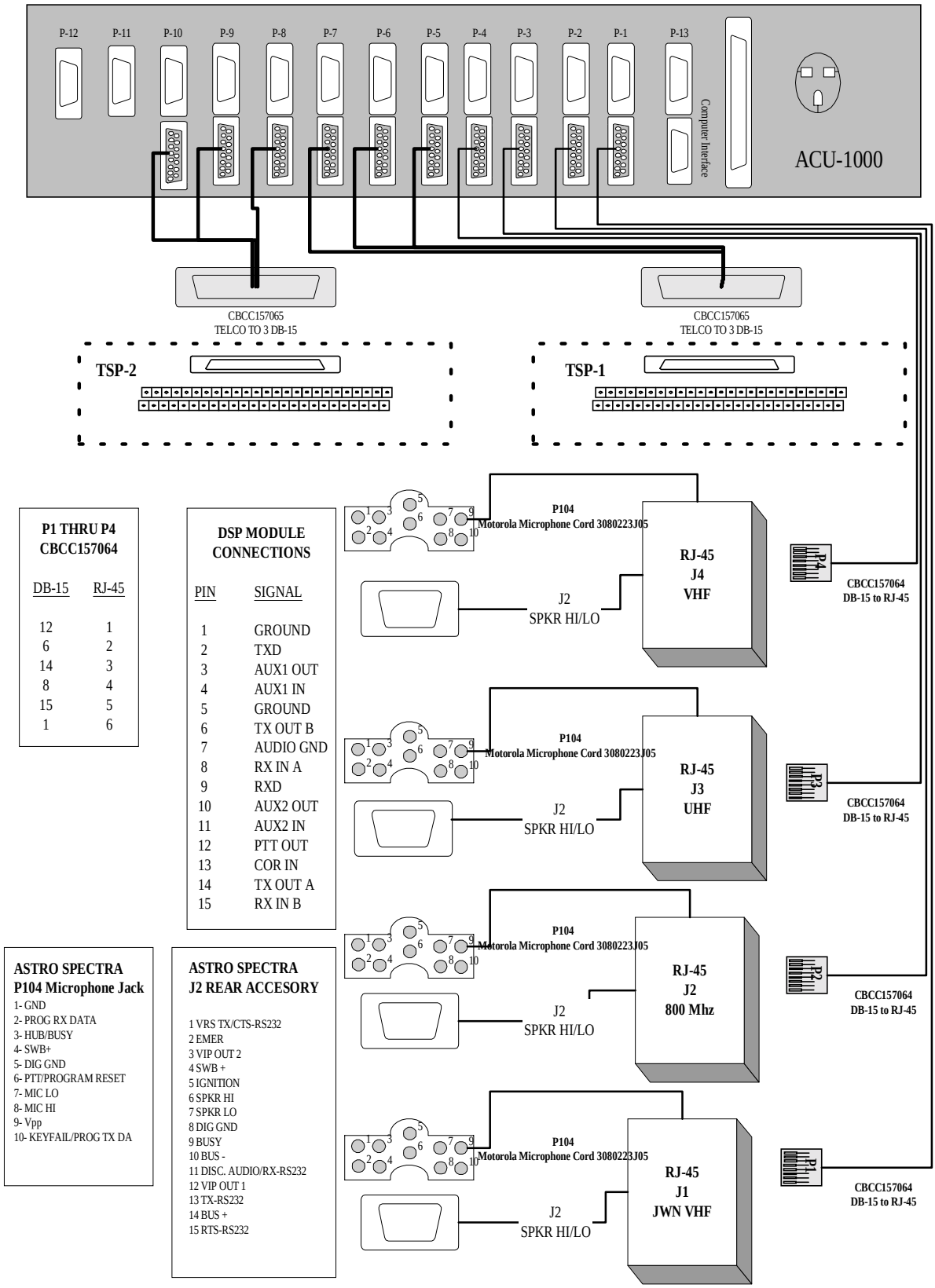

Figure A-3
TPSRIU Audio Cabling Diagram

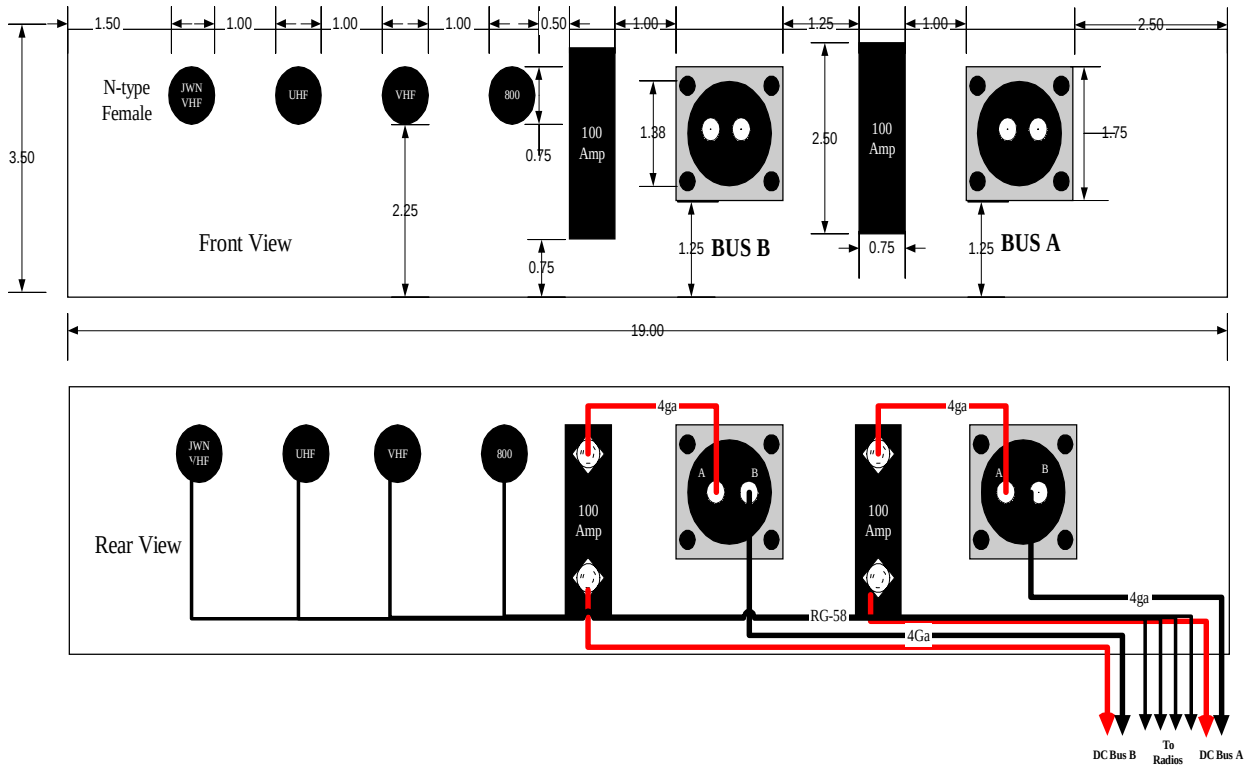

Figure A-4
RF/Power Panel Drawing

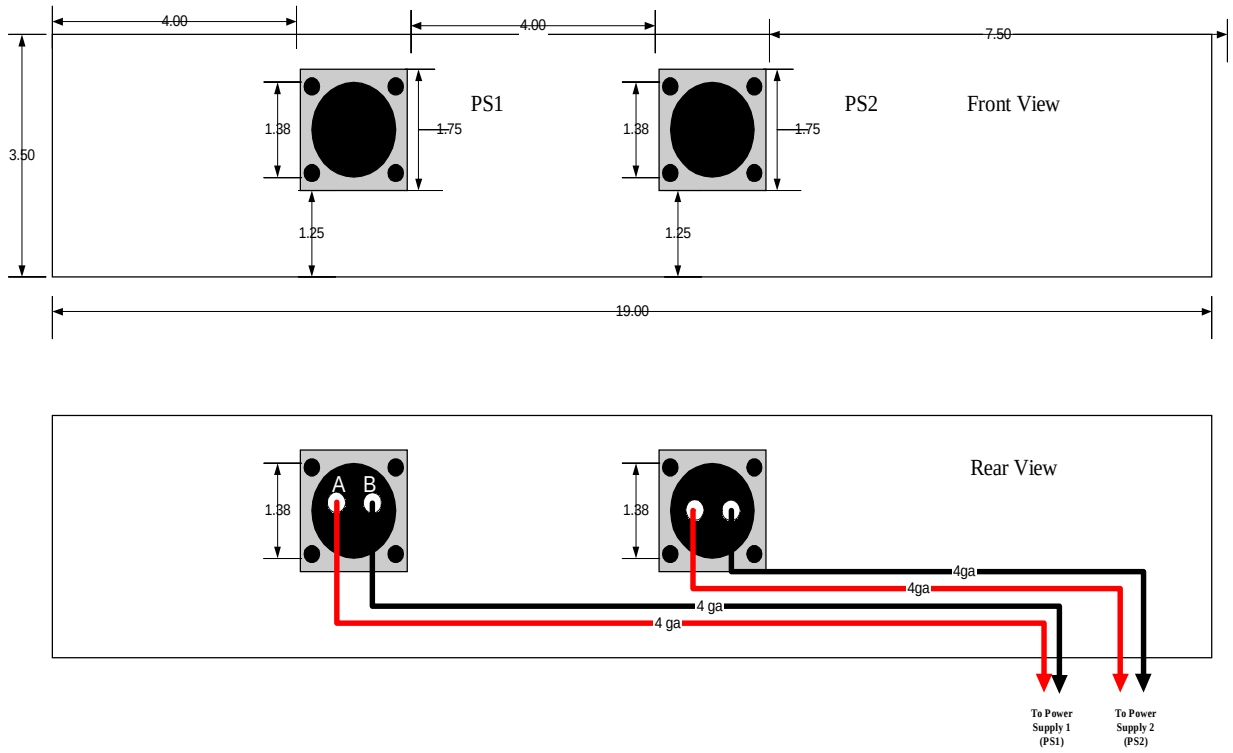

Figure A-5
Power Box Power Panel Drawing

Table A-1
Terminal Strip Interconnection

Transportable Public Safety Radio Interface Unit Terminal Strip Panel 1 & 2 Connections						
	Pin #	Function	Description	Pin #		Description
DSP 5 or DSP8	1	Ground	Ground Connection	26	TX Out A	Balanced transmit audio output
	2	TX Out B	Balanced Transmit Audio Output	27	PTT Out	Active low PTT output to a transmitter
	3	RX In A	Balanced Receive Audio Input	28	RX In B	Balanced receive audio input
	4	Audio Gnd	Audio Ground for unbalanced inputs/outputs	29	COR IN	COR input from receiver, active low
	5	Ground	Ground Connection	30	AUX Out I	Auxiliary Output I - Active low; used for special functions
	6	AUX In 1	Auxiliary Input I - Active Low; used for special functions	31	RX D	RX data; used for special functions
	7	AUX Out 2	Auxiliary Output 2 - Active low; used for special functions	32	AUX In 2	Auxiliary Input 2 - Active low; used for special functions only
	8	TX D	TX Data; used for special functions	33	Not Connected	
DSP 6 or DSP 9	9	Ground	Ground Connection	34	TX Out A	Balanced transmit audio output
	10	TX Out B	Balanced Transmit Audio Output	35	PTT Out	Active low PTT output to a transmitter
	11	RX In A	Balanced Receive Audio Input	36	RX In B	Balance receive audio input
	12	Audio Gnd	Audio Ground for unbalanced inputs/outputs	37	COR IN	COR input from receiver, active low
	13	Ground	Ground Connection	38	AUX Out I	Auxiliary Output I - Active low; used for special functions
	14	AUX In 1	Auxiliary Input I - Active Low; used for special functions	39	RX D	RX data; used for special functions
	15	AUX Out 2	Auxiliary Output 2 - Active low; used for special functions	40	AUX In 2	Auxiliary Input 2 - Active low; used for special functions only
	16	TX D	TX Data; used for special functions	41	Not Connected	
DSP7 or DSP10	17	Ground	Ground Connection	42	TX Out A	Balanced transmit audio output
	18	TX Out B	Balanced Transmit Audio Output	43	PTT Out	Active low PTT output to a transmitter
	19	RX In A	Balanced Receive Audio Input	44	RX In B	Balance receive audio input
	20	Audio Gnd	Audio Ground for unbalanced inputs/outputs	45	COR IN	COR input from receiver, active low
	21	Ground	Ground Connection	46	AUX Out I	Auxiliary Output I - Active low; used for special functions
	22	AUX In 1	Auxiliary Input I - Active Low; used for special functions	47	RX D	RX data; used for special functions
	23	AUX Out 2	Auxiliary Output 2 - Active low; used for special functions	48	AUX In 2	Auxiliary Input 2 - Active low; used for special functions only
	24	TX D	TX Data; used for special functions	49	Not Connected	
	25	Not Connected		50	Not Connected	

Table A-2€
TPSRIU Radio Matrix€

Transportable Public Safety Radio Interace Unit (TPSRIU) Radio Matrix											
		Cable DB-15 to RJ-45 Part # CBCC157064			RJ-45 Jack	Mic Cord Motorola Part # 3080223J05	Motorola ASTRO Spectra Mid/Low Power		Motorola High Power Remote Head		
DSP-1 Module	**DB-15 Female Rear ACU-1000 Function**	**DB-15 Male (Rear ACU-1000)**	**Wire Color**	**RJ-45 Male Pin**	**Pin #**	**Wire Color**	**P104 Mic Jack**	**J2 Rear Accessory**	**P104 Mic Jack**	**Function**	**Radio Type**
Module 1	DIG GND	1	BLUE	6	6	WHITE			5	GND	**JWN VHF High Power Radio**
	TXD	2									
	AUX OUT 1	3									
	AUX IN 1	4									
	DIG GND	5									
	TX Out B	6	ORANGE	2	2	BLACK			7	MIC LO	
	AUDIO GND	7									
	RX In A	8	GREEN	4	4				REMOTE CABLE	SPKR HI	
	RX D	9									
	AUX Out 2	10									
	AUX In 2	11									
	PTT Out	12	WHT/ORG	1	1	GREEN			6	PTT	
	COR In	13									
	TX Out A	14	WHT/GRN	3	3	RED			8	MIC HI	
	RX In B	15	WHT/BLU	5	5				REMOTE CABLE	SPKR LO	
		SPARE									
Modules 2-4	DIG GND	1	BLUE	6	6	WHITE	5			GND	**DSP 2 800 MHz**
	TXD	2									
	AUX OUT 1	3									
	AUX IN 1	4									
	DIG GND	5									
	TX Out B	6	ORANGE	2	2	BLACK	7			MIC LO	**DSP 3 UHF**
	AUDIO GND	7									
	RX In A	8	GREEN	4	4			6		SPKR HI	
	RX D	9									
	AUX Out 2	10									
	AUX In 2	11									**DSP 4 VHF**
	PTT Out	12	WHT/ORG	1	1	GREEN	6			PTT	
	COR In	13									
	TX Out A	14	WHT/GRN	2	3	RED	8			MIC HI	
	RX In B	15	WHT/BLU	5	5			7		SPKR LO	
		SPARE									

APPENDIX B—AN EXCERPT FROM
Transportable Communications System—A Solution for Public Safety Wireless Interoperability

PSWN€

Public Safety Wireless Network

Transportable Communications System

A Solution for Public Safety Wireless Interoperability

June 2000€

4. FIELD OPTIMIZATION

Several TCS system operational challenges were revealed during testing. Field tests included interoperability of the TCS with several radio systems of various modulation schemes and system architectures. Call connections were established among disparate radio systems. In addition to system alignment, the JPS ACU-1000 audio switch required parameter-setting adjustments to optimize call connections.

4.1 Repeater PTT Oscillation

Preliminary tests revealed that when a call between two repeater channels was interconnected by the TCS, it resulted in an oscillation of keyed states between the repeater systems (see Figure 8 on page 26). The problem began after the initial call from agency A was completed and the interconnected TCS radio B released its PTT. The remote repeater for agency B continued to transmit for the duration of its hang time. Because the TCS radio B was no longer transmitting, it detected the hang time audio, and if the audio was noisy or scratchy, the VOX activated keying the connected TCS radio A. As a result, the Agency A remote repeater was brought up again. After the agency B repeater hang time expired, the cycle reversed. Once started, this repeater oscillation cycle could continue almost indefinitely. To reduce the probability of this happening, the DSP-1 module can be configured for the Voice Modulation Recognition (VMR) circuit, as recommended by JPS. Also, the "COR Inhibit After PTT" parameter can be adjusted to minimize repeater hang-time effects. The default COR Inhibit setting is 1, corresponding to 100 ms. A setting of about 6 (2 seconds) was identified as a preferred setting. An increase in the "COR Sampling Interval," if COR Sampling is enabled, from the factory default of 4 (5 seconds) to 9 (10 seconds) might minimize adverse oscillation by disturbing the oscillation by releasing the keyed state for a brief moment. The preferred operation used the VOX circuit in conjunction with a modification of the COR Inhibit setting.

Oscillations can also occur when high-powered mobile radios and their antennas are closely positioned. Receiver desensitization may occur, in which the operation of radio A directly causes radio B to operate. Radios can oscillate keyed and receive states under these conditions. Alternatively, a static keyed state for radio A and a static receive state for radio B can also occur. The VOX of the DSP-1 module for radio B can activate and force radio A to stay keyed. As above, VMR, COR Inhibit, and COR Sampling can mitigate adverse effects, but sufficient RF isolation among radios is advisable.

4.2 Full Repeat Delay

The total delay, composed of each system's delay plus the ACU-1000 VOX or VMR delay, was also identified as a TCS variable that required improvement. The total delay in some connections was about 3 seconds. The DSP-1 module's Audio Delay setting was identified as a parameter that could be adjusted to minimize the loss of the first few seconds of call audio. Proper audio level settings are an effective solution that should be explored before other parameters are adjusted. If VMR is used, the Noise Reduction Value parameter may need to be adjusted for proper control.

4.3 Variable Receiver Audio Level

The Motorola radios prevented using independent receive audio levels, and therefore, the volume control was always active on the radio control head. This situation created an alignment problem. Whenever the volume level on the control head is adjusted, the audio level changes in the pre-aligned DSP-1 module. Because console personnel will undoubtedly adjust the volume level during mission operations, they must be briefed on what happens when they manipulate the control head volume and advised to return it to a predetermined (or posted) level setting to assure proper TCS operation.

4.4 Trunking Event Tones and PTT Oscillation

When the TCS interconnects trunked and conventional systems, errant trunking talk permit tones may be transmitted (see Figure 9 on page 27). In this scenario, a conventional radio call is received by the TCS conventional radio and passed through to activate an interconnected trunked TCS mobile radio, which requests a channel. As the conventional operator continues speaking , the trunked radio, not yet transmitting, receives its PTT activation from the control channel and generates a talk permit tone. This tone is passed to the conventional TCS mobile along with VOX PTT logic and keys the TCS conventional radio, thereby transmitting the talk permit tone over the air while the conventional channel is still in use. This situation can happen if the push-to-talk (PTT) logic has priority over the COR logic on the DSP-1 module associated with the conventional radio (the default setting).

A few possible solutions are identified for the talk permit tone difficulties. The Type 1 Trunking setting for the DSP-1 modules alleviates all talk permit tone problems if all radio connections are available. The Type 1 Trunking setting requires a separate PTT acknowledge output from the radio to indicate when the radio is granted a channel. If available, the radio logic output is connected to the AUX 1 In, pin #4 of the DSP-1 module. The Motorola mobile radios do not provide such a separate PTT acknowledge output. To avoid oscillations, COR priority over PTT for the conventional radio may be considered. If a particular mutual aid talk group is used for the trunked radio system, the trunked system could be modified so that the talk group always uses the same RF channel, thereby eliminating the need for all trunked radios using the mutual aid talk group to wait for channel assignment. The COR Inhibit time for the trunked radio DSP-1 module may also be adjusted to prevent the radio from passing the trunking talk permit tones. VMR operation, instead of VOX, may inhibit passing the trunking talk permit tones, but this alternative has not yet been tested in the TCS. A practical solution is simply to program the trunked radio in the TCS, if possible, not to emit talk permit tones.

A trunked system interconnect to a conventional repeater system may also cause PTT oscillations to occur in much the same sequence as described previously in section 4.1.

Figure 8. Field Optimization
Repeater PTT Oscillation

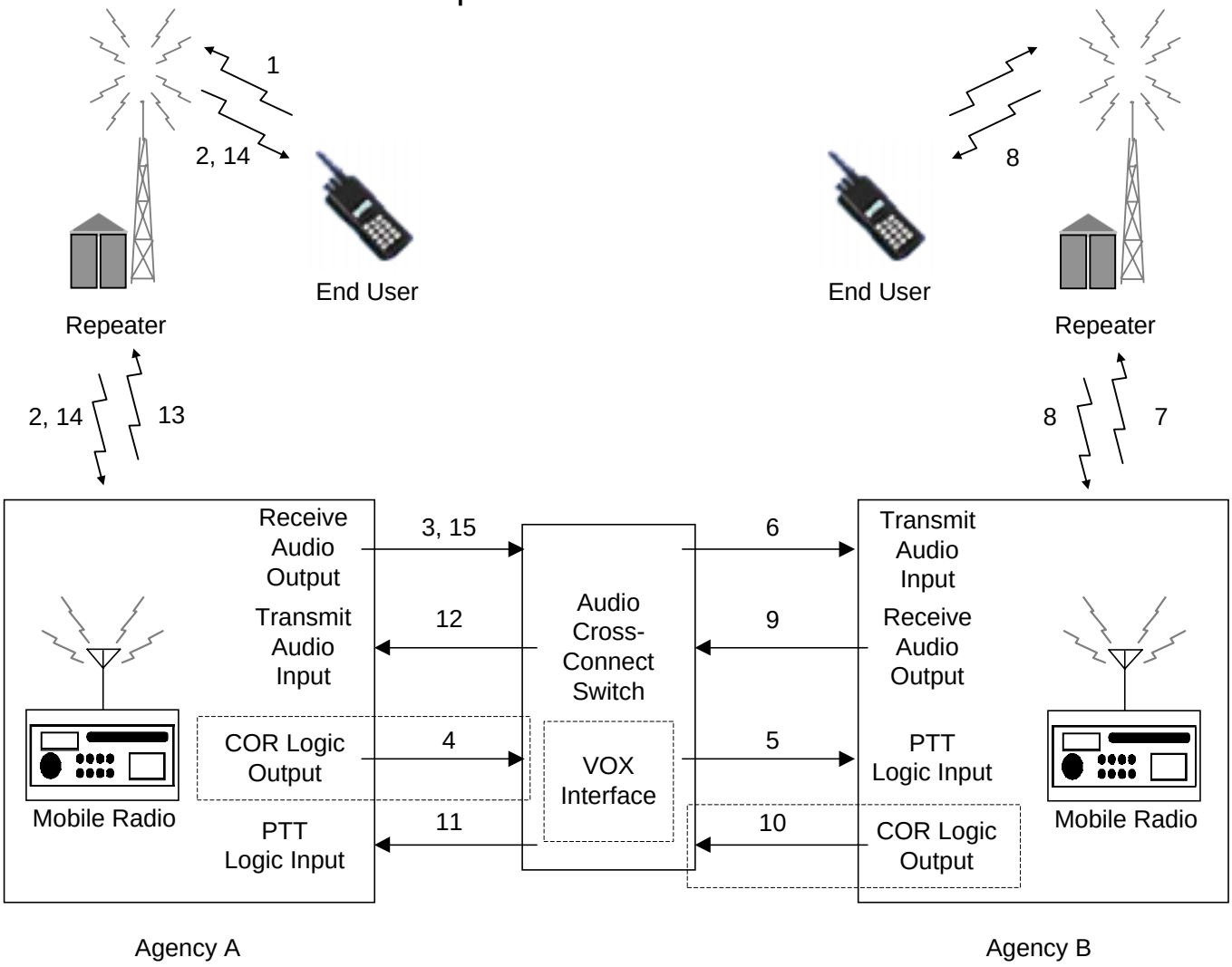

1. Agency A end user keys up
2. Agency A repeater keys up and holds for hang time
3. Agency A mobile radio receives end user audio
4. Audio cross-connect switch VOX detects received audio
5. Audio cross-connect switch activates Agency B mobile radio PTT
6. Received audio is passed to Agency B mobile radio
7. Agency B mobile radio keys up
8. Agency B repeater keys up and holds for hang time
9. Agency B mobile radio releases key and receives repeater carrier
10. Audio cross-connect switch VOX detects received audio
11. Audio cross-connect switch activates Agency A mobile radio PTT
12. Received audio is passed to Agency A mobile radio
13. Agency A mobile radio keys up
14. Agency A repeater keys up and holds for hang time
15. Agency A mobile radio releases key and receives repeater carrier

Figure 9. Field Optimization
Trunking Event Tones And PTT Oscillation

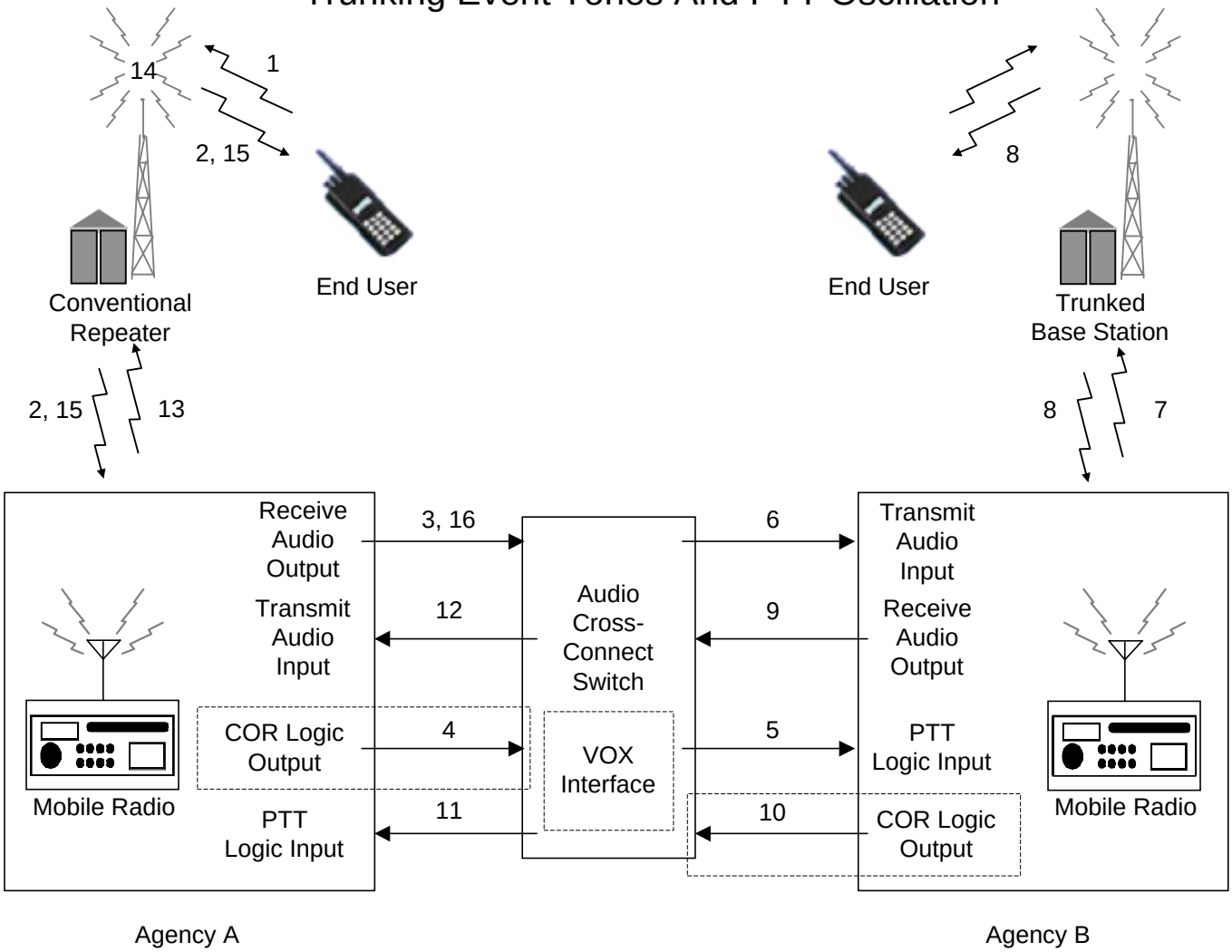

1. Agency A end user keys up and stays keyed
2. Agency A repeater keys up
3. Agency A mobile radio receives end user audio
4. Audio cross-connect switch VOX detects received audio
5. Audio cross-connect switch activates Agency B mobile radio PTT
6. Received audio is passed to Agency B mobile radio
7. Agency B mobile radio keys up, releases key, and waits for trunked channel
8. Agency B trunked base station sends trunked channel information
9. Agency B mobile radio emits talk permit tones
10. Audio cross-connect switch VOX detects talk permit tones
11. Audio cross-connect switch activates Agency A mobile radio PTT
12. Received audio is passed to Agency A mobile radio
13. Agency A mobile radio keys up
14. Mobile radio and end user transmissions compete or mix at repeater
15. Agency A repeater keys up with Agency B talk permit tones or distorted audio
16. Agency A mobile radio releases key and receives repeater transmission

APPENDIX C—PARTS LISTING

Transportable Public Safety Radio Interface Unit Parts Listing				
Vendor	**QTY**	**Description**	**System Nomenclature**	**Part Number**
Motorola	1	Justice Wireless Network VHF High Power Mobile 50-100W VHF 136-174 MHz Astro Digital CAI DES/DES-XL/DES-OFB Astro P25 OTAR	Justice Wireless Network VHF Radio	T99DX - 091W 091W G806 G625 G298
	1	VHF Mobile Radio 25-50W 136-174 MHz, W4 Astro Digital CAI Conventional System Digital ID Display	VHF Radio	T99DX - 086W 086W G806 G48 G114
	1	UHF Government Band Mid Power Mobile 20-40W 403-433Mhz Astro Digital CAI Smartnet Operation Digital ID Display	UHF Radio	T99DX - 145W 145W G806 G50 G114
	1	800 MHz High Power Mobile 35W 806-870 MHz W4 Astro Digital CAI Conventional System Digital ID Display SmartZone Operation	800 MHz Radio	T99DX - 130W 130W G806 G48 G114
	1 1 1 1 1 1	Smart Rib Interface Box 120 Volt Power Supply Computer to RIB Cable Radio Service Software Programming Cable - High Power Programming Cable - Mid Power	Software & Programming Cables	RLN1015 0180302E27 3080390B48 RVN4100 0180300B10 3080369B73
JPS Communications **5720M Capital Blvd** **Raleigh, NC 27616** **(919) 790-1011** **WWW.JPS.COM**	1 1 1 1 11 1	Chassis PSM-1 Power Supply CPM-2 CPU Module HSP-2 Handset Speaker Module DSP-1 Digital Signal Processor Module (11 Modules) PSTN-1 Public Switched Telephone Interface	ACU-1000 Interconnect Switch	5961-200000 5951-813000 5961-213000 5962-314000 5961-818000 5961-215000
Newmar Power Products **PO Box 1306** **Newport Beach, CA 92663** **(714) 751-0488** **WWW.NEWMARPOWER.COM**	1 6 2 5 2 2 2	DC Distribution Panel 20 Amp Circuit Breaker 100 Amp Circuit Breaker 5 Amp Circuit Breaker 40 Amp Circuit Breaker 10 Amp Circuit Breaker PM12-70 Power Module	DC Distribution Panel Breakers 3,5,6,14,15,18 Battery Disconnect Breakers Breakers 2,4,11,13,19 Breakers 12 Breaker 1, Power Supply 1 & 2	DST-20 PBA-20 996-3284-0 PBA-5 PBA-40 PBA-10 PM12-70
Wireless Electronics	4	Astro Spectra Microphone Cords		3080223J05
Cableco Technologies **6780 Sierra Court** **Dublin CA 94568** **(401) 657-3070**	80ft 80ft	4 Gauge Black Power Cable 4 Gauge Red Power Cable		EF4-105-2 EF4-105-0
ECS Cases **3560 Rogue River Highway** **Grant Pass Oregon 97257** **(541) 476-8871** **WWW.ECSCASE.COM**	1	14U Case with options (TPSRIU Case) 12" slide out shelf Removable Caster Stacking Feet Lift Rings Zippered Storage Pouch Support Rail	Series 5314 Transit Case	19598 Opt 205 Opt 326 Opt 207 Opt 230 Opt 236 Opt 209
	1	Cases w/options (Power Case) Stacking Feet Lift Rings Zippered Storage Pouch	Series 5706 Transit Case	19599 Opt 207 Opt 230 Opt 236

Allied Electronics **7406 Alban Station Court Suite B211** **Springfield VA 22150** **1-800-433-5700** **WWW.ALLIEDELEC.COM**	2	Weidmuller Terminal Strip	Terminal Strip 1 & 2	WDM 912201
	2	Weidmuller Terminal Strip Mounting Rails		WDM 915066
	4	Amphenol Power Connector 4 Gauge 97-3106A-24-9P (621)	Power Cord Plug	602-4159
	2	Amphenol Power Connector 4 Gauge 97-3102A-24-9S (621)	Connectors	602-3160
	2	Amphenol Power Connector 4 Gauge 97-3106A-24-9S (621)	Power Supply 1 & 2 Power Connectors	602-3159
	2	Amphenol Power Connector 4 Gauge 97-3106A-24-9P (621)	Power Cord Plug	602-4160
	4	Amphenol Power Connector Covers 97-60-24	Caps Panel Mounted Power Connectors	714-2552 (621)
	6	Amphenol Power Connector Covers 97-3057-1016-1	Caps Power Cord Connectors	714-2553 (621)
	6	Amphenol Power Connector Strain Relief Housing 97-3057-1016-1		714-2565 (621)
	2	Alternating Current (AC) Power Cords	Power Cords Newmar PM12-70	17616 Black
	1	Cable Covering	Black Covering DC Power Cables	GRP110 3/4 Black
	4	RJ-45 Wall Mount Blocks		FM014
Black Box **1000 Park Drive** **Lawrence, Pa 15055** **(724) 746-5500** **WWW.BLACKBOX.COM**	1	AC Power Strip	Power Supply Case AC Power Strip	SP187A
	2	Flat Filler Panel	RF/Power Panel	RM217
	2	Telco to 3 DB-15 Cable	Cable from ACU-1000 to Terminal Strip	CBCC157065
	4	RJ-45 to DB-15 Cable	Cable from ACU-1000 to each radio	CBCC157064
	1	Hinge Kit 2 Rack Unit Panel	RF/Power Panel	36063
	1	Ground Bar	Central Ground Bus	23966
Tessco **11126 McCormick Road** **Hunt Valley MD 21031** **(800) 472-7373** **WWW.TESSCO.COM**	4	N-Female Bulk Head Connector		48131
	4	Mini-UHF Crimp Connectors		10364
	12ft	8 Gauge Black DC Power Cable		34609
	12ft	8 Gauge Red DC Cable		23893
	4	Magnetic Mount Antenna		82934
	3	Power Block Modules	DC-1, DC-2, & Gnd	95902
	1	Netting Harness Series 5314 Case		17.00033
Sooner Trailer **1515 McCurdy** **Duncan Oklahoma 73533** **(580) 470-7117** **WWW.SOONERTRAILER.COM**	1	Netting Harness Series 5706 Case		17.00034
	4	Tie Down Plates		25.00258
	4	Backing Plates		25.00259
	4	Tie Down Stubs		25.00257

APPENDIX D—ACRONYMS

A	Amp
AC	Alternating Current
CAI	Common Air Interface
COR	Carrier-Operated Relay
COTS	Commercial Off-the-Shelf
CPM	Control Processor Module
dB	Decibel
dBm	Decibels referenced to 1 mW
DC	Direct Current
DIG	Digital
DOJ	Department of Justice
DSP	Digital Signal Processor
EIA	Electronic Industries Alliance
FDMA	Frequency Division Multiple Access
FM	Frequency Modulation
GFE	Government Furnished Equipment
GND	Ground
HSP	Handset Speaker Prompt
HVAC	Heating, Ventilation, and Air Conditioning
Hz	Hertz
IPT	Integrated Program Team
JWN	Justice Wireless Network
kHz	Kilohertz
MCV	Mobile Command Vehicle
MHz	Megahertz
Mic	Microphone
ms	Millisecond
mV	Millivolt
mW	Milliwatt
OTAR	Over-the-Air Rekeying
PABX	Private Automatic Branch Exchange
PC	Personal Computer
PL	Private Line
PMO	Program Management Office
POC	Proof of Concept
PSTN	Public Switched Telephone Network
PSWN	Public Safety Wireless Network
PTT	Push-To-Talk
RCS	Regional Communications System
RF	Radio Frequency
RMS	Root Mean Squared
RX	Receive
TCS	Transportable Communications System
TIA	Telecommunications Industry Association
TPSRIU	Transportable Public Safety Radio Interoperability Unit

TSP	Terminal Strip Panel
TX	Transmit
UHF	Ultrahigh Frequency
USCS	U.S. Customs Service
V	Volt
VHF	Very High Frequency
VMR	Voice Modulation Recognition
VOX	Voice-Operated Transmit
W	Watt

Report Tab—Insert Document

3. *TRANSPORTABLE PUBLIC SAFETY RADIO INTEROPERABILITY UNIT USERS AND MAINTENANCE MANUAL*

PUBLIC SAFETY
PSWN PROGRAM
WIRELESS NETWORK

Saving Lives and Property Through Improved Interoperability

Transportable Public Safety Radio Interoperability Unit (TPSRIU) User & Maintenance Manual

Final

September 2001

TABLE OF CONTENTS

Page

1. INTRODUCTION 1

1.1 Purpose 1
1.2 Description 1

2. OPERATING CONTROLS AND INDICATORS 3

2.1 Radio Unit 3
2.1.1 DC Distribution Panel 3
2.1.2 ACU-1000 4
2.1.3 Radios 4
2.1.4 Fixed Bottom Shelf 4
2.1.5 Radio Frequency (RF)/Power Panel 5
2.2 Power Unit 5

3. FUNCTIONAL DESCRIPTION 6

3.1 RF/Audio Signal Path 6
3.2 Power Distribution 6

4. OPERATING PROCEDURES 8

4.1 Setup 8
4.1.1 Physical Setup 8
4.1.2 Power Connection 9
4.1.3 Antenna Connection 10
4.2 Initial Settings and Powering “On” 10
4.2.1 Power 10
4.2.2 Radios 11
4.2.3 Audio Switch 11
4.3 Connecting Other Radios 11

5. SHUTDOWN 13

5.1 Emergency 13
5.2 Normal 13

6. PREPARATION FOR TRANSPORT 14

6.1 Disconnecting 14
6.2 Stowing 14

7. SYSTEM MAINTENANCE 16

7.1 Troubleshooting 16
7.1.1 Test Equipment 16
7.1.2 Fault Logic and Troubleshooting Diagrams. 16
7.2 Corrective Maintenance 23
7.2.1 General Guidelines 23
7.2.2 Individual Component Removal/Replacement Procedures 23

LIST OF FIGURES

Figure 1 Transportable Public Safety Radio Interoperability Unit (TPSRIU) 2
Figure 2 Radio Unit Front View 3
Figure 3 Radio Frequency (RF)/Power Panel 5
Figure 4 TPSRIU Power Unit 5
Figure 5 Functional Signal Flow Diagram 6
Figure 6 Functional Power Distribution Diagram 7
Figure 7 TPSRIU Harness System 8
Figure 8 Direct Current Power Cable Routing 9
Figure 9 Operational TPSRIU Trailer 10
Figure 10 Web Harnessing 15
Figure 11 Signal Flow Fault Logic Diagram 17
Figure 12 Power Problem Fault Logic Diagram 20
Figure 13 RF/Audio Signal Path Diagram 22
Figure 14 Power Distribution Diagram 22

LIST OF TABLES

Table 1 Major Item Equipment List..... 1
Table 2 DC Distribution Panel Configuration 4
Table 3 External Radio Audio and PTT Connections 12

1. INTRODUCTION

NOTE: WARNINGS and CAUTIONS

WARNINGS and CAUTIONS are included with operating procedures, practices, or conditions considered essential to the protection of personnel (WARNING) or equipment and property (CAUTION). WARNINGS and CAUTIONS apply each time the related step is repeated.

1.1 Purpose

The Transportable Public Safety Radio Interoperability Unit (TPSRIU) serves the following purposes:

- Provides first response communications interoperability during the initial 24 to 48 hours of an emergency situation
- Potentially supplements or extends the reach of fixed infrastructure coverage
- Provides transportable communications backup with flexible system configuration
- Enhances local, state, and federal interoperability during emergency situations and special events.

1.2 Description

The TPSRIU integrates several commercial off-the-shelf (COTS) products into a public safety wireless interoperability solution appropriate for certain situations. Major items are listed in Table 1. The components are installed in two 19-inch rack-mount transit cases, as shown in Figure 1. The smaller case contains the power supplies. The larger case contains all the other elements of the system.

Table 1
Major Item Equipment List

Name	Manufacturer	Part Number
DC Distribution Panel	Newmar	DST-20
Audio Switch	JPS Communications	ACU-1000
800 MHz Radio	Motorola	D04UJF9PW4AN
JWN VHF Radio	Motorola	T04KLF9PW4AN
UHF Radio	Motorola	D04QKF9PW4AN
VHF Radio	Motorola	D04KKF9PW4AN
Power Supply #1	Newmar	PM12-70
Power Supply #2	Newmar	PM12-70

Front View **Rear View** **Side View**

Figure 1
Transportable Public Safety Radio Interoperability Unit (TPSRIU)

The radio unit uses an ACU-1000 intelligent interconnect system audio cross-connect switch with radio logic control, manufactured by JPS Communications. The ACU-1000 is configured with 1 handset/speaker/prompt (HSP)-2 module, 1 public switched telephone network (PSTN)-1 module, and 11 digital signal processor (DSP)-1 radio interface modules. DSP-1 module numbers 1 through 4 are interfaced to the following radios mounted in the TPSRIU: one mid-power very high frequency (VHF) high-band unit, one government band SmartNet trunk-capable ultra high frequency (UHF) (403–433 megahertz [MHz]) unit, one SmartZone trunk-capable 800 MHz unit, and one high-power Justice Wireless Network (JWN) compatible VHF radio. DSP-1 module numbers 5 through 7 are interfaced to Terminal Strip Panel 1 (TSP-1). DSP-1 module numbers 8 through 10 are interfaced to TSP-2. DSP-1 module number 11 is a spare module. TSP-1 and TSP-2 therefore provide the audio and push-to-talk (PTT) interface for connection of up to six additional radios to the ACU-1000. The radio unit draws its operating power from external 12-volt (V) direct current (DC) vehicle batteries.

The TPSRIU system is equipped with a power unit that provides 13.8 V DC, in place of vehicle batteries, when 110 V alternating current (AC) is available. The unit contains two PM12-70 power supplies, manufactured by Newmar, each of which can provide a continuous 70 amps at 13.8 V DC.

2. OPERATING CONTROLS AND INDICATORS

2.1 Radio Unit

Figure 2 shows the location of the major components comprising the radio unit, as well as the interface points for connection of additional radios (if needed).

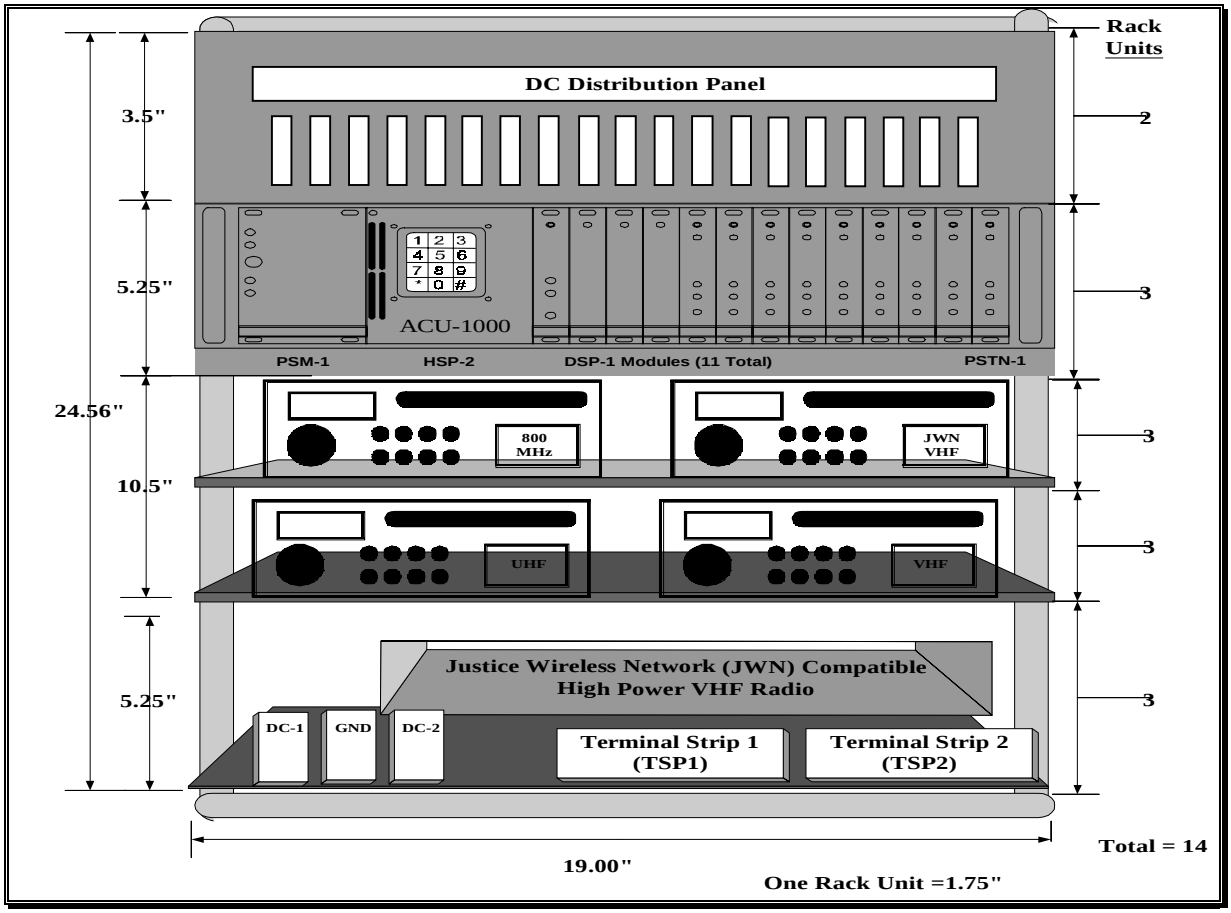

Figure 2
Radio Unit Front View

2.1.1 DC Distribution Panel

Listed in Table 2 are the circuit breakers and the units for which they control power. DC-1 and DC-2 are the independent, +13.8 V DC connection points for providing power to additional radios. **Note:** Table 2 applies to TPSRIU systems 1 through 6. The panel is different for TPSRIU system 1 installed at Salt Lake City, Utah, in that breaker positions 9 and 10 are not available for use, rather than simply being empty.

Table 2
DC Distribution Panel Configuration

Breaker #	Purpose TPSRIU System 1	Purpose TPSRIU Systems 2-6
1	ACU-1000	ACU-1000
2	800 MHz Ignition Sense	800 MHz Ignition Sense
3	800 MHz Power	800 MHz Power
4	VHF Ignition Sense	VHF Ignition Sense
5	VHF Power	VHF Power
6	DC-1	DC-1
7	Empty	Empty
8	Empty	Empty
9	Unusable Split Bus Modification	Empty
10	Unusable Split Bus Modification	Empty
11	JWN High Power VHF Remote Head	JWN High Power VHF Remote Head
12	JWN High Power VHF Power	JWN High Power VHF Power
13	UHF Ignition Sense	UHF Ignition Sense
14	UHF Power	UHF Power
15	DC-2	DC-2
16	Empty	10A Spare
17	Empty	40A Spare
18	20A Spare	20A Spare
19	5A Spare	5A Spare
20		5A Spare

2.1.2 ACU-1000

For details on the operation of this unit see the JPS Communications, Inc. *Installation and Operation Manual*, Revision 2.1, JPS P/N 5961-200200.

2.1.3 Radios

For details on the operation of the various radios, see the Motorola's *Astro Digital Spectra User's Guide for Mobile Radio Models W4, W5, W7, and W9*, Motorola P/N 68P81074C80-D. As shown in Figure 2, mounted on the top sliding tray are one SmartZone trunk-capable 800 MHz (806–870 MHz) radio and one JWN-compatible VHF (146–174 MHz) high-power radio. Mounted on the bottom sliding tray are one mid-power VHF (146–174 MHz) radio and one government band SmartNet trunk-capable UHF (403–433 MHz) radio.

2.1.4 Fixed Bottom Shelf

On the fixed bottom shelf up to six additional radios may be interfaced to the TPSRIU. DC-1 and DC-2 are separate 20 amp, +13.8 V DC connection points with a common ground return between them. TSP-1 and TSP-2 provide the audio and PTT interface for connection of up to six additional radios to the ACU-1000. The JWN-compatible VHF radio is mounted to the rear of this shelf.

2.1.5 Radio Frequency (RF)/Power Panel

Shown in Figure 3 is the RF/Power panel on the rear of the radio unit. The figure shows the BUS A and BUS B DC power connection points and their associated 100 amp circuit breakers. BUS A and its breaker are on the far right. BUS B and its breaker are in the middle. Also on the panel are the type N coaxial connections for interfacing the internal radios to their respective antennas. From left to right these connections are JWN VHF, UHF, VHF, and 800 MHz.

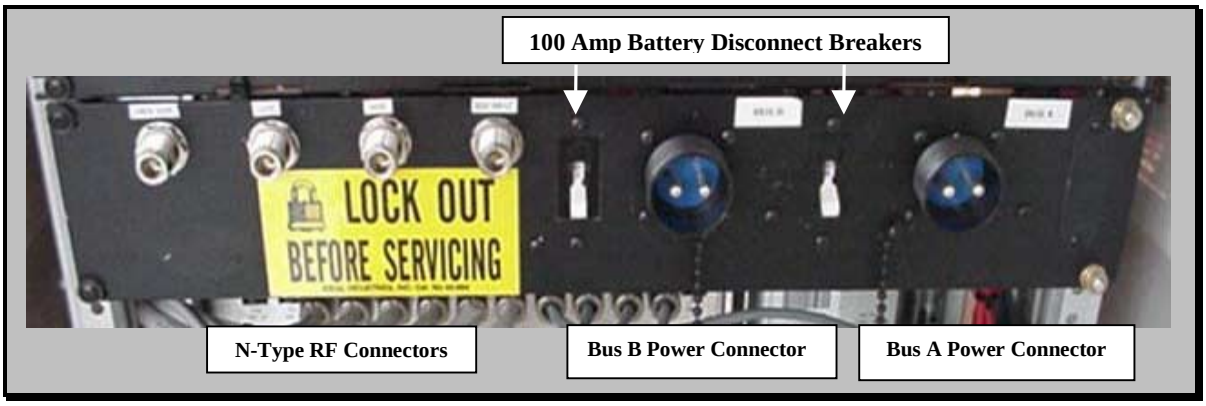

Figure 3
Radio Frequency (RF)/Power Panel

2.2 Power Unit

Two Newmar PM12-70 power supplies comprise the power unit. For unit configuration, refer to Figure 4 (front view) . Between the power supplies is a locking drawer for storage of manuals and the unit interconnection cables. Power Supply (PS)1 is above the drawer, and PS2 is located below the drawer. The rear view shows the location of the PS1 and PS2 power output connections, as well as the switched power strip to which the power supplies' AC power cords are connected. The PS1 connection is on the left and PS2 on the right.

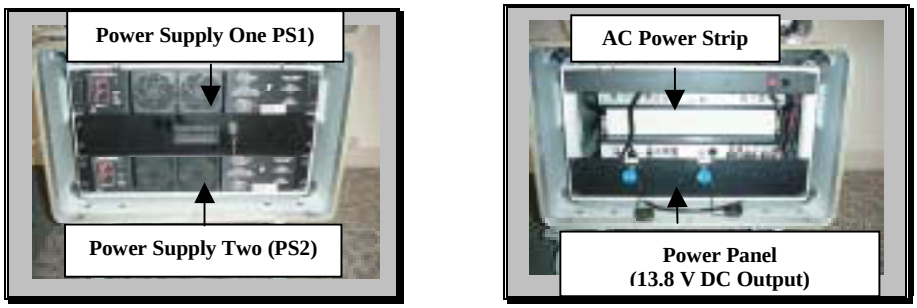

Front View **Rear View**

Figure 4
TPSRIU Power Unit

3. FUNCTIONAL DESCRIPTION

3.1 RF/Audio Signal Path

Figure 5 is a block diagram indicating signal flow through the TPSRIU. RF signals from external antennas enter the TPSRIU through coaxial connectors on the RF/Power panel. From the RF/Power panel the RF signals are routed to the appropriate radio, where they are then translated to analog audio signals. These signals then enter the audio switch where, under operator control, they are cross-connected to (1) other TPSRIU radios, or (2) external radios connected at TSP-1 or TSP-2, or (3) the handset connected to the front panel of the switch, or (4) an external telephone connected to the front panel of the switch. The outgoing PTT control for radio connections is derived from incoming audio (VOX). Transmit audio is routed to the appropriate radio where it is up-converted to RF and then sent on to the coaxial connectors on the RF/Power panel.

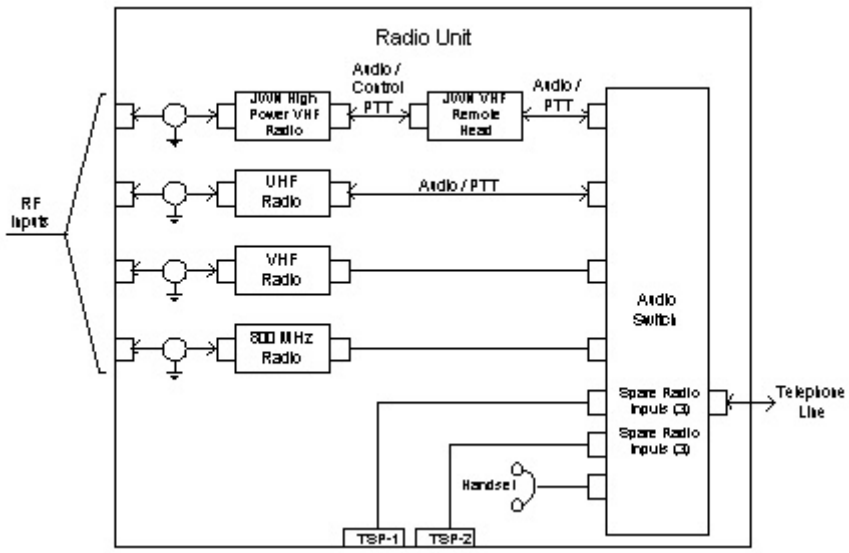

Figure 5
Functional Signal Flow Diagram

3.2 Power Distribution

Figure 6 is a block diagram indicating power distribution in the TPSRIU. AC power enters the power unit through the switched AC power strip and is distributed to the two power supplies. The DC output is then transmitted to connectors PS1 and PS2. When AC is available for the TPSRIU, these outputs are connected to BUS A and BUS B on the radio unit via the provided cables. DC power enters the radio unit through the BUS A and BUS B connectors on the RF/Power panel. The negative polarity connector terminals are connected directly to the rack ground bus. The positive polarity terminals are each connected to the power distribution panel through 100 amp circuit breakers/switches. The BUS A and BUS B connections are connected to the like-named terminals on the power distribution panel. BUS A power is routed to breakers 1 through 10 within the power distribution panel, and BUS B is routed to breakers 11 through 20.

The switched outputs of these breakers are distributed to TPSRIU components in accordance with the information listed in Table 2.

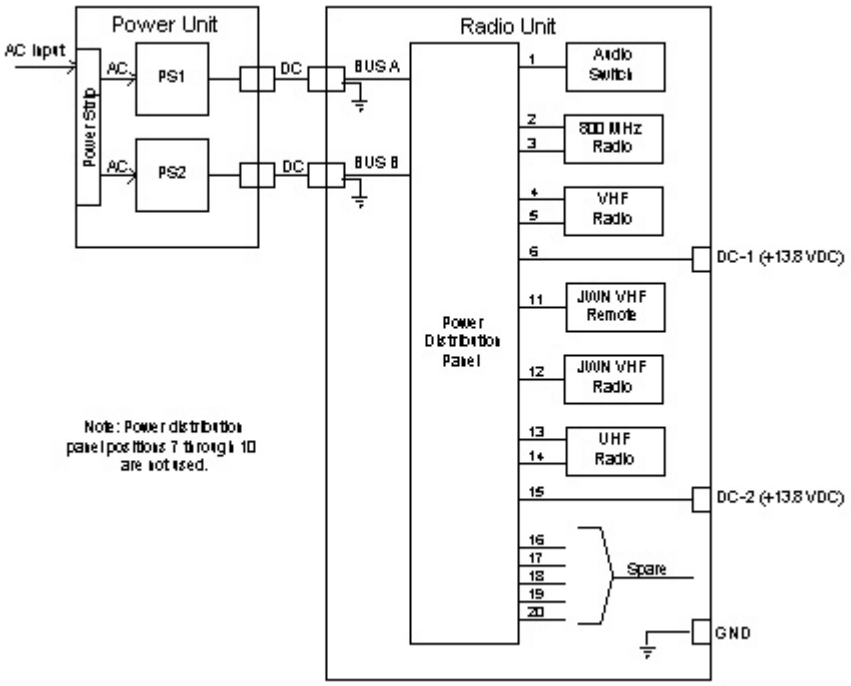

Figure 6
Functional Power Distribution Diagram

4. OPERATING PROCEDURES

4.1 Setup

This section describes the physical setup of the TPSRIU in the trailer.

4.1.1 Physical Setup

Figure 7 shows how the web harness tie-downs are used to secure the equipment during transport within a high vibration environment.

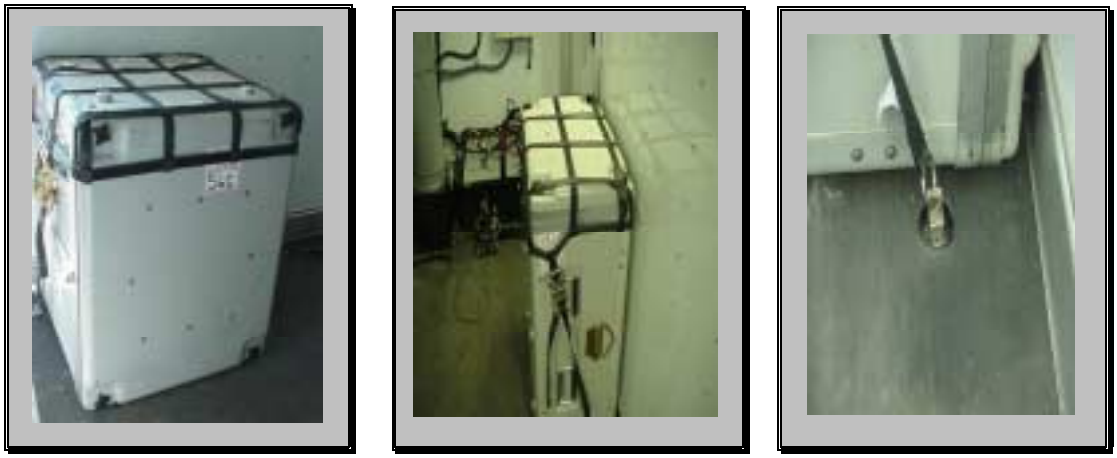

Figure 7
TPSRIU Harness System

WARNING
The radio unit weighs 150 pounds and the power unit 100 pounds. At least two persons should be available to move either case.

The radio unit is secured in the anterior of the trailer against the lateral wall located adjacent to the side door. The power unit is stored vertically on its lid with the rails facing the workbench. Two floor tie-down points, located 4 inches from the wall, are used to secure each case. To unfasten the cases, the ratchets on the web tie-downs must be released. The webbing is then removed by detaching it from its hold-down points. The front and rear case covers are removed next by rotating their hand screws completely counter clockwise. Complete rotation is necessary to ensure proper re-attachment. The units are then positioned and stacked in the desired location. After stacking, users should ensure that the pins (stored within the cases) that join the units together are properly inserted.

CAUTION
Never transport the TPSRIU in the stacked configuration. Always stow it away in accordance with the directions outlined in Section 5.

4.1.2 Power Connection

Power for the TPSRIU can be provided by the on-board battery bank located in the front of the trailer. Users should ensure that when the system is drawing power from the trailer batteries, the power converter is on and charging the batteries. The TPSRIU requires two separate DC input connections. Cables are routed from the back of the trailer to the front, along the cable trough located where the wall meets the ceiling. This configuration is shown in Figure 8.

Figure 8
Direct Current Power Cable Routing

DC power is connected at BUS A and BUS B located on the rear RF/Power panel. Care should be taken to remove the protective caps affixed during transport. In-line fuses are installed at the battery end to prevent damage to the equipment in the event that the power circuits are shorted.

WARNING

Observe proper precautions when making DC and AC power connections. Do not handle exposed connections while the equipment is powered on. The AC voltage can be lethal, and even though the DC voltage is low, considerable current is associated with it, thus heavy arcing could occur.

In Figure 9, the system is shown being operated from the rear of the trailer. The figure shows the radio unit stacked on top of the power unit. When operating from an AC power source, users should connect BUS A and BUS B on the RF/Power panel to PS1 and PS2 on the back of the power unit via the cables provided, but only after removing the protective caps from PS1 and PS2. The last step is to connect the power unit to the AC power source.

Front View **Rear View**

Figure 9
Operational TPSRIU Trailer

4.1.3 Antenna Connection

The appropriate antennas, not supplied with the TPSRIU, are connected to the coaxial connectors located on the RF/Power panel.

4.2 Initial Settings and Powering "On"

4.2.1 Power

If the TPSRIU is operating without its companion power unit, it is activated by means of the two 100 amp circuit breakers located on the rear RF/Power panel. If it is operating with the companion power unit, the TPSRIU is energized by means of the switch located on the power strip on the back of the power unit before activating the 100 amp circuit breakers. Selected radios are activated by means of their respective circuit breakers located on the power distribution panel. Users must ensure both the ignition and main power breakers are activated

for the desired radios. Finally, the ACU-1000 is activated by means of its circuit breaker located on the power distribution panel.

4.2.2 Radios

Radios are pre-programmed for desired modes and frequencies. If it is desired to change the initial settings, consult Motorola's *Astro Digital Spectra User's Guide for Mobile Radio Models W4, W5, W7, and W9*, Motorola P/N 68P81074C80-D. *ASTRO Radio Software*, RVN 4100, may also be referenced for operating instructions. **Note:** The receive audio volume control should be set at mid range for optimal operation with the ACU-1000.

4.2.3 Audio Switch

The ACU-1000 switch enables the interconnection of radios operating in disparate frequency bands. It also enables operator use of any connected radios via a handset. For setup instructions for the ACU-1000, users should consult the JPS Communications, Inc., *Installation and Operation Manual*, Revision 2.1, JPS P/N 5961-200200.

4.3 Connecting Other Radios

DC power required when connecting additional radios to the TPSRIU is supplied via DC-1 or DC-2 and the ground return between them (see Figure 2). Audio and PTT connections, available on TSP-1 and TSP-2 (see Figure 2), are listed in Table 3. For unbalanced audio, ground the "B" pin of the audio pair and connect the unbalanced audio to the "A" pin. Antenna RF connections for additional radios are not included with the TPSRIU.

Table 3
External Radio Audio and PTT Connections

DSP-1 Module	DB-15 Female (Rear ACU-1000) Function	TSP Terminal Number
Modules 5 (TSP-1) or 8 (TSP-2)	DIG GND	1
	TX Out B	2
	RX In A	3
	AUDIO GND	4
	DIG GND	5
	AUX IN 1	6
	AUX Out 2	7
	TXD	8
	TX Out A	26
	PTT Out	27
	RX In B	28
	COR In	29
	AUX OUT 1	30
	RX D	31
	AUX In 2	32
Modules 6 (TSP-1) or 9 (TSP-2)	DIG GND	9
	TX Out B	10
	RX In A	11
	AUDIO GND	12
	DIG GND	13
	AUX IN 1	14
	AUX Out 2	15
	TXD	16
	TX Out A	34
	PTT Out	35
	RX In B	36
	COR In	37
	AUX OUT 1	38
	RX D	39
	AUX In 2	40
Modules 7 (TSP-1) or 10 (TSP-2)	DIG GND	17
	TX Out B	18
	RX In A	19
	AUDIO GND	20
	DIG GND	21
	AUX IN 1	22
	AUX Out 2	23
	TXD	24
	TX Out A	42
	PTT Out	43
	RX In B	44
	COR In	45
	AUX OUT 1	46
	RX D	47
	AUX In 2	48

5. SHUTDOWN

5.1 Emergency

If the TPSRIU is operating without its companion power unit, users should disconnect the power by turning the two 100 amp circuit breakers on the RF/Power panel to the “Off” position. If the TPSRIU is operating with the companion power unit, users should power down the TPSRIU by flipping the switch on the power strip located on the back of the power unit to the “Off” position.

5.2 Normal

Powering down the individual units is accomplished by turning the appropriate breakers located on the power distribution panel to the “Off” position. The remainder of the shutdown process then follows the emergency shutdown procedure outlined in Section 5.1.

6. PREPARATION FOR TRANSPORT

This section describes the dismantling and stowing procedures for the TPSRIU, in preparation for transport.

WARNING

Observe proper precautions when breaking DC and AC power connections. Do not handle exposed connections while the equipment is powered on. The AC voltage can be lethal, and even though the DC voltage is low, considerable current is associated with it, thus heavy arcing could occur.

CAUTION

Failure to follow the stowing procedure could result in damage to the equipment during transport.

WARNING

The radio unit weighs 150 pounds and the power unit 100 pounds. At least two persons should be available to move either case.

6.1 Disconnecting

After shutting off all power switches, users should disconnect/remove all external power and signal cables. If installed, the two power cables connecting BUS A and BUS B (located on the RF/Power panel) to PS1 and PS2 (located on the back of the power unit) should be removed and stowed away. Finally, the protective caps for the BUS A, BUS B, PS1, and PS2 DC power connectors should be re-affixed to their respective positions.

6.2 Stowing

Any loose connections/fittings (e.g., screws preventing the radio trays from sliding out) should be secured. The pins securing the radio unit to the power unit should be removed and returned to their storage positions within the cases. Each lid has a serial number that should be matched up with the serial number on its corresponding case. Note that the serial numbers are different for each side of the case. The front and rear covers should be attached to the units by placing them in position and rotating the hand screws fully clockwise. The radio unit should be placed between the tie-down points in the front of the trailer against the wall adjacent to the side door. The power unit should be positioned vertically on its lid, between the tie-down points with the rails facing the workbench.

Figure 10 shows a properly stowed TPSRIU. The webbing should be placed over the cases with the ratchets facing out (Photographs 1 & 2) and attached to the tie-down points (Photograph 3). Then the end of the loose strap is pulled on until the slack is removed from the webbing (Photograph 4). Next the webbing is tightened with the ratchet mechanism until all slack is removed. **Note:** Users should take care not to over tighten the tie-down harness.

Photograph 1

Photograph 2

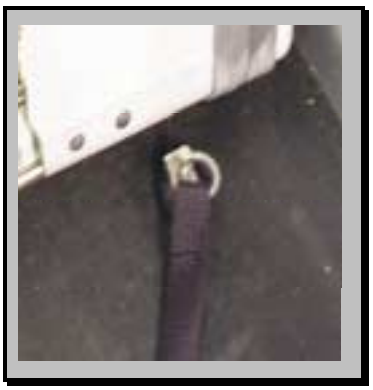

Photograph 3

Photograph 4

Figure 10
Web Harnessing

7. SYSTEM MAINTENANCE

NOTE: WARNINGS and CAUTIONS

WARNINGS and CAUTIONS are included with operating procedures, practices, or conditions considered essential to the protection of personnel (WARNING) or equipment and property (CAUTION). WARNINGS and CAUTIONS apply each time the related step is repeated.

7.1 Troubleshooting

This section lists the test equipment needed to troubleshoot system problems and provides detailed logic diagrams to assist in the troubleshooting process.

7.1.1 Test Equipment

Table 1 lists the test equipment required to perform the troubleshooting procedures in this chapter. **Note:** This equipment is not provided with the TPSRIU system.

Table 4
Test Equipment

Name	Example
Digital Multimeter	Fluke Type 21 or B & K Type 2860
Communications Test Set	Motorola R2670 or Agilent 8920B

7.1.2 Fault Logic and Troubleshooting Diagrams

Shown in Figures 11A–C is the signal flow fault logic diagram. To use this three-page diagram, follow the logic flow from left to right to identify the symptom. Then scan from top to bottom for the checks and corrective actions.

Figures 12A–B show the power problem fault logic diagram. To use this two-page diagram, follow the logic flow from left to right to identify the symptom. Then scan from top to bottom for the checks and corrective actions.

Figures 13 and 14, respectively, are the corresponding signal flow and power distribution diagrams, which can also assist in fault isolation.

.

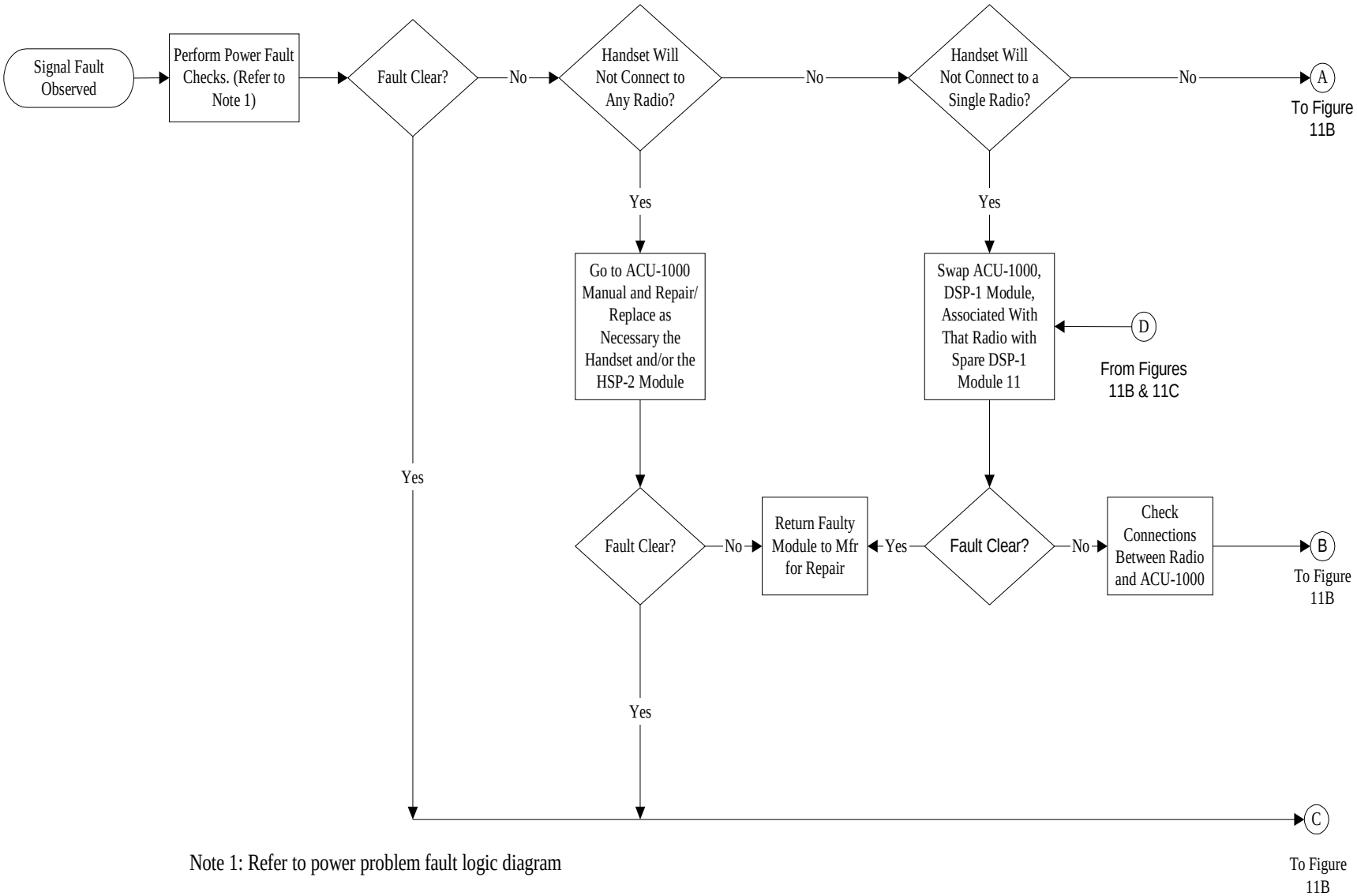

Note 1: Refer to power problem fault logic diagram

Figure 11A
Signal Flow Fault Logic Diagram

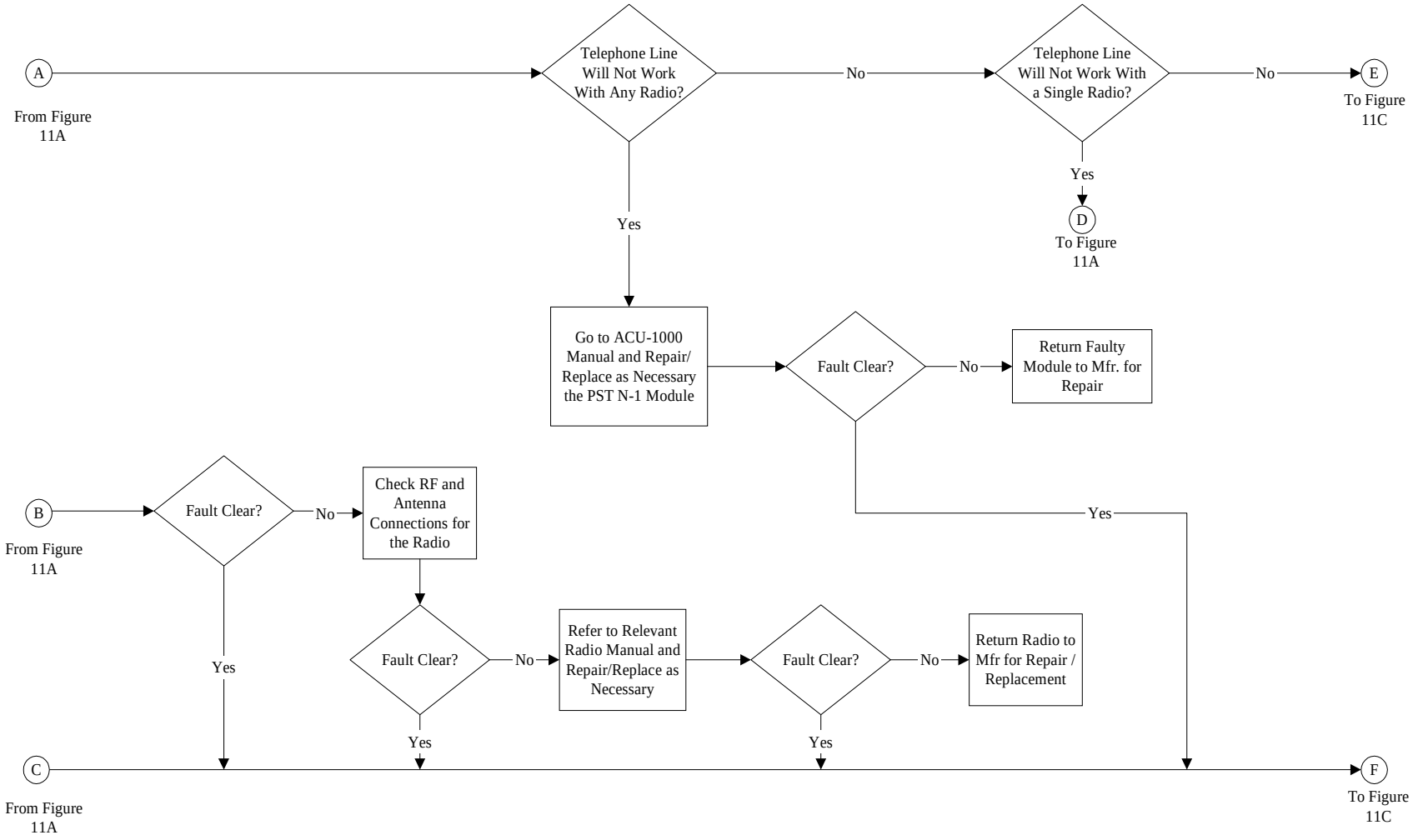

Figure 11B
Signal Flow Fault Logic Diagram

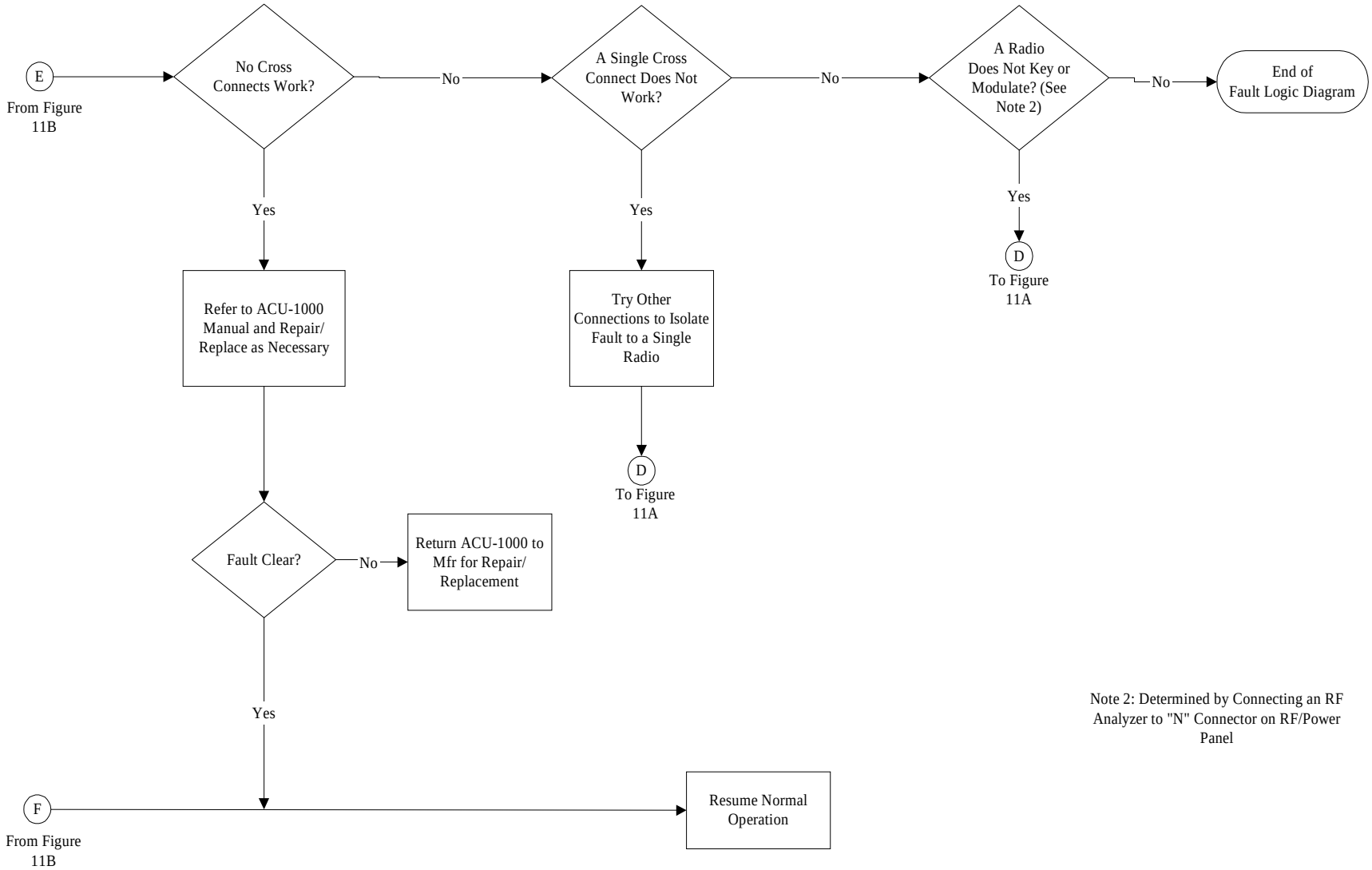

Figure 11C
Signal Flow Fault Logic Diagram

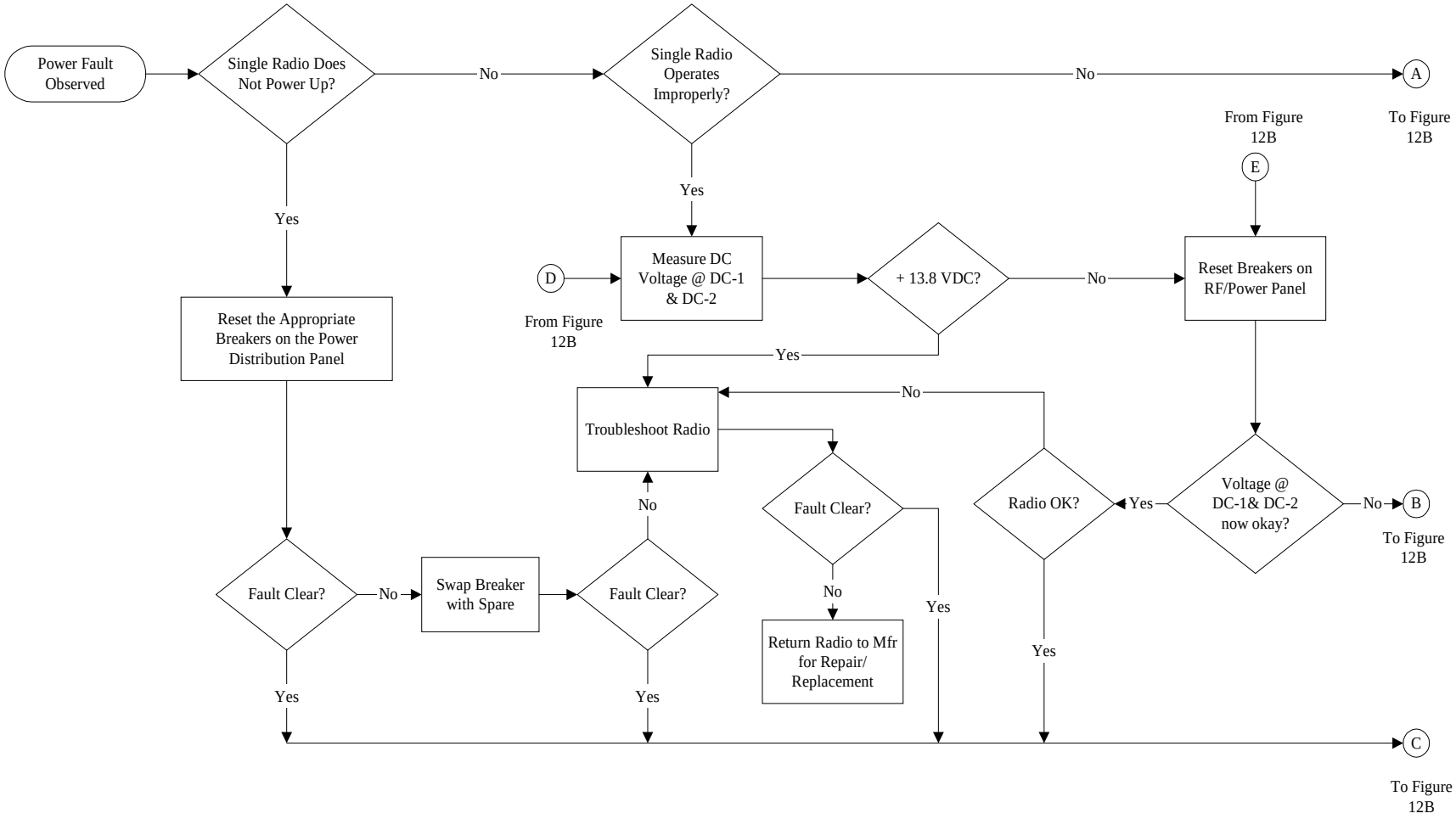

Figure 12A
Power Problem Fault Logic Diagram

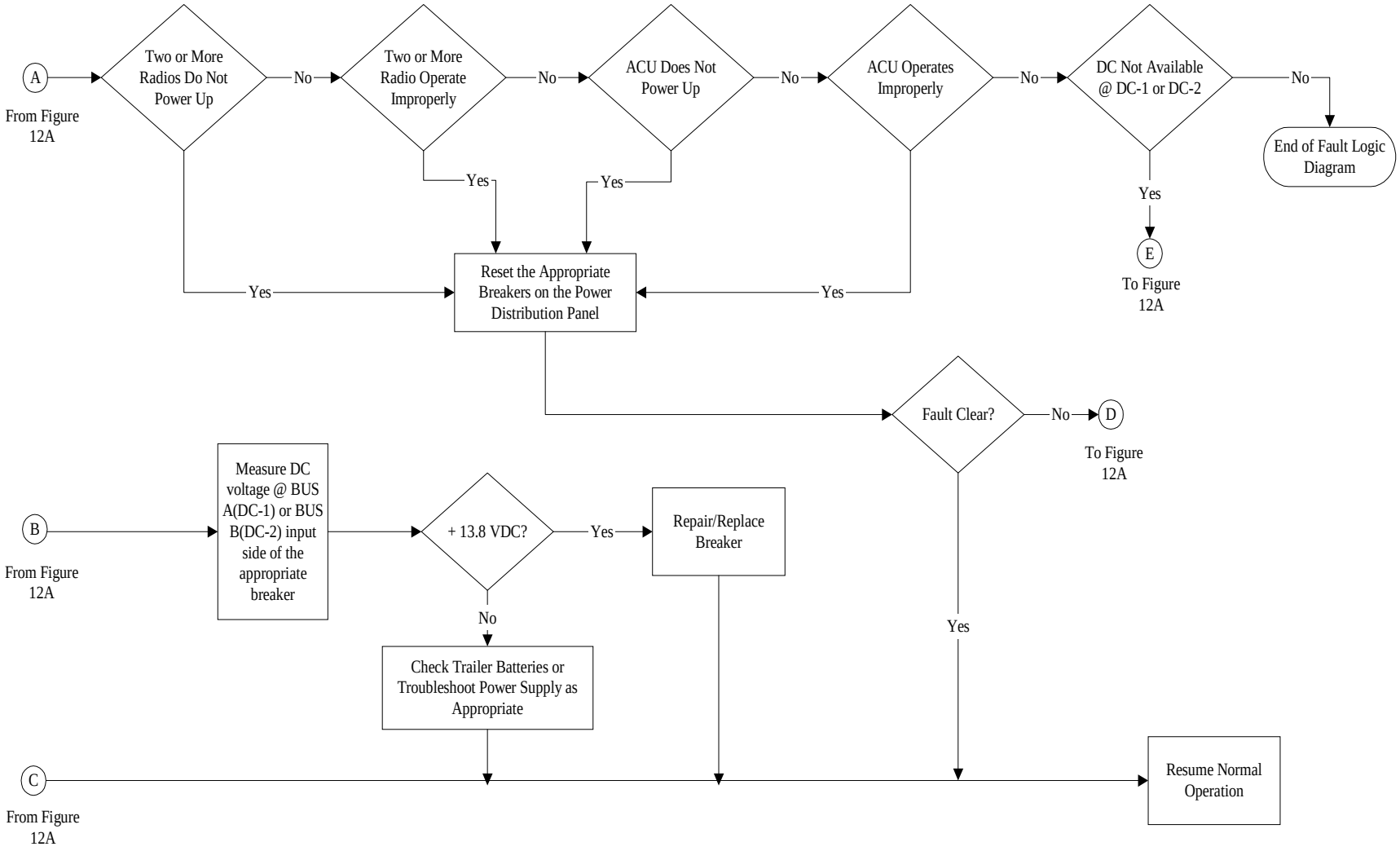

Figure 12B
Power Problem Fault Logic Diagram

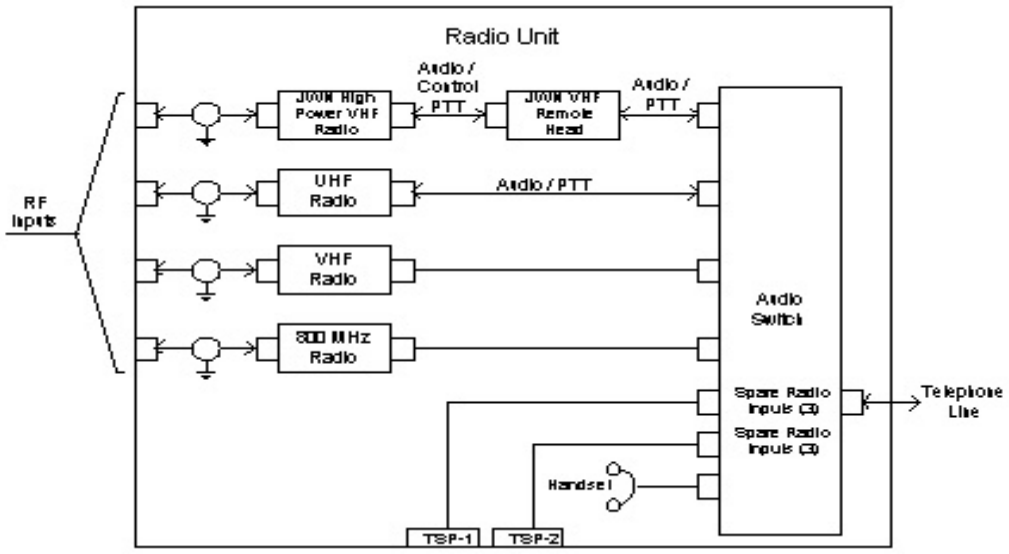

Figure 13
RF/Audio Signal Path Diagram

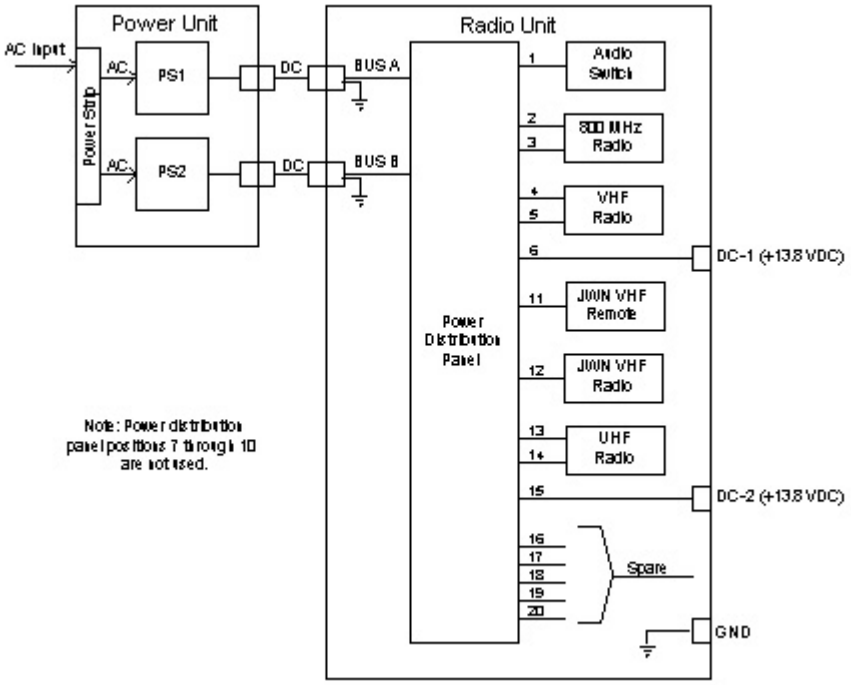

Figure 14
Power Distribution Diagram

7.2 Corrective Maintenance

CAUTION
Failure to use the correct tool can damage the hardware.

CAUTION
Avoid sharp bends in any cable when removing cables, wires, or connectors.
Do not allow cables to be pinched when reinstalling an assembly.
Do not remove a connector by pulling on the cable; instead grasp the connector and pull straight out. Do not force connectors onto a connector header when reinstalling them; this could damage the connector pins.

WARNING
Observe proper precautions when breaking DC and AC power connections. Do not handle exposed connections while the equipment is powered on. The AC voltage can be lethal, and even though the DC voltage is low, considerable current is associated with it, and thus heavy arcing could occur.

WARNING
The radio unit weighs 150 pounds and the power unit 100 pounds. At least two persons should be available to move either case.

7.2.1 General Guidelines

This section contains general information related to performing maintenance on the TPSRIU system.

- **Tools and Materials—**No special tools or materials are required to perform the procedures listed in this section.

- **Repair Tips—**When an assembly is removed from the unit, maintainers should store the non-captive hardware for use when the assembly is re-installed. One method for doing this is to reattach the hardware to the unit or assembly as appropriate.

- **Removing System Power—**Disconnect power from the TPSRIU before removal and replacement of any of the components. If the TPSRIU is operating without its companion power unit, maintainers should disconnect power by turning the two 100-amp circuit breakers located on the RF/power panel to the “off” position. If the TPSRIU is operating with the companion power unit, maintainers should power down the TPSRIU by flipping the switch on the power strip, located on the back of the power unit, to the “off” position. The corresponding breaker on the DC distribution panel must also be turned to the “off” position.

7.2.2 Individual Component Removal and Replacement Procedures

This section describes the steps for removing and replacing the individual components of the TPSRIU.

7.2.2.1 Mid/Low-Power Astro Radio Removal and Replacement. Outlined below is the procedure for the removal and replacement of a defective radio. These steps should be followed before performing any maintenance on the radio or shipping it back to the manufacturer for repair.

a. Remove the two screws holding the slide tray to the rack.

b. Extend the tray to the locked position.

c. Disconnect the control/receive audio, microphone, power, and RF cables from the radio.

d. Remove the four thumb-screws holding the radio to its bracket.

e. Remove the radio.

f. If a replacement radio is to be installed, the installation procedure is simply the reverse of the removal process. If the radio is not being replaced, slide the tray back into the rack and reattach it to the rack.

CAUTION

Check the cable clearance when sliding the trays back into the rack to ensure that the cables are not pinched by the trays or slides.

For more information on performing maintenance on the mid/low-power radios, maintainers should consult Motorola's *Astro Digital Spectra User's Guide for Mobile Radio Models W4, W5, W7, and W9*, Motorola P/N 68P81074C80-D, and the *ASTRO Radio Software*, RVN 4100.

7.2.2.2 High-Power Astro Radio Remote Control Head Removal and Replacement. Outlined below is the procedure for removal and replacement of the high-power radio remote head. These steps should be followed before performing any maintenance on the remote head or shipping it back to the manufacturer for repair.

a. Remove the two screws holding the slide tray to the rack.

b. Extend the tray to the locked position.

c. Disconnect the control/receive audio and microphone cables from the radio.

d. Remove the two thumb-screws holding the radio to its bracket.

e. Remove the control head.

f. If a replacement radio is to be installed, the installation procedure is simply the reverse of the removal process. If the radio is not being replaced, slide the tray back into the rack and reattach it to the rack.

CAUTION

Check the cable clearance when sliding the trays back into the rack to ensure that the cables are not pinched by the trays or slides.

For more information on performing maintenance on the remote control head, maintainers should consult Motorola's *Astro Digital Spectra User's Guide for Mobile Radio Models W4, W5, W7, and W9*, Motorola P/N 68P81074C80-D, and the *ASTRO Radio Software,* RVN 4100.

7.2.2.3 High-Power Astro Radio Removal and Replacement. Outlined below is the procedure for removal and replacement of the high-power radio. These steps should be followed before performing any maintenance on the radio or shipping it back to the manufacturer for repair.

a. From the rear of the rack, disconnect the control/receive audio, power, and RF cables from the radio unit in the bottom of the rack.

b. Turn the key on the back of the radio to release the latch holding the radio in place. Press the latch down and slide the radio out of the rack.

c. If a replacement radio is to be installed, the installation procedure is simply the reverse of the removal process.

For more information on performing maintenance on the high-power radios, maintainers should consult Motorola's *Astro Digital Spectra User's Guide for Mobile Radio Models W4, W5, W7, and W9*, Motorola P/N 68P81074C80-D, and the *ASTRO Radio Software,* RVN 4100.

7.2.2.4 ACU-1000 Removal and Replacement. Outlined below is the procedure for removal and replacement of the ACU-1000 switch. These steps should be followed before performing any maintenance on the switch or shipping it back to the manufacturer for repair.

a. From the rear of the rack, remove all screws on the "D" audio/control connectors from the ACU-1000.

b. From the rear of the rack, remove the two screws and disconnect the power from the unit. The DC power is located on the rear lower right of the ACU-1000.

c. From the front of the rack, remove the four screws holding the ACU-1000 to the rack.

d. From the front of the rack, slide the unit out.

e. If a replacement ACU-1000 is to be installed, the installation procedure is simply the reverse of the removal process.

For more information on performing maintenance on the ACU-1000, maintainers should consult the JPS Communications, Inc., *Installation and Operation Manual*, Revision 2.1, JPS P/N 5961-200200. The manual and additional information are located on the vendor's Web site at www.jps.com.

7.2.2.5 DC Power Distribution Unit Removal and Replacement. Outlined below is the procedure for removal and replacement of the DC power distribution unit. These steps should be followed before performing any maintenance on the power distribution unit or shipping it back to the manufacturer for repair. **Note:** Defective breakers are replaced from the front of the unit.

a. From the rear of the rack, disconnect all power wires leading into the panel. **Note:** Access is easier if the two left screws on the RF/power panel are removed and that panel is rotated on its hinge.

b. From the front of the rack, remove the four screws holding the power distribution panel to the rack.

c. Remove the unit from the rack.

d. If a replacement power distribution panel is to be installed, the installation procedure is simply the reverse of the removal process.

For more information on performing maintenance on the DC distribution panel, maintainers should consult the Newmar Power Products, *Installation and Operation Instructions Manual*, Newmar P/N M-DST-20B. For additional information on this product, see the vendor's Web site at www.newmarpower.com.

7.2.2.6 Power Supply Removal and Replacement. Outlined below is the procedure for removal and replacement of a power supply. These steps should be followed before performing any maintenance on the power supply or shipping it back to the manufacturer for repair.

a. Disconnect the power supply from the external AC power source.

b. Unplug the faulty power supply from the AC power distribution strip located on the back of the power unit.

c. Disconnect the DC power connections from the back of the power supply.

d. On the front of the power supply, remove the eight screws holding it to the front of the rack and slide the power supply out of the rack.

e. If a replacement power supply is to be installed, the installation procedure is simply the reverse of the removal process.

For more information on performing maintenance on the power supply, maintainers should consult the Newmar Power Products, *Power Supply/Battery Charger Installation and Operation Manual*, Newmar P/N M-PMSER-A. For additional information on this product, see the vendor's Web site at www.newmarpower.com.

APPENDIX A
ACRONYMS

APPENDIX A—ACRONYMS

A	Amp
AC	Alternating Current
CAI	Common Air Interface
COR	Carrier-Operated Relay
COTS	Commercial Off-the-Shelf
CPM	Control Processor Module
dB	Decibel
dBm	Decibels referenced to 1 mW
DC	Direct Current
DIG	Digital
DOJ	Department of Justice
DSP	Digital Signal Processor
EIA	Electronic Industries Alliance
FDMA	Frequency Division Multiple Access
FM	Frequency Modulation
GFE	Government Furnished Equipment
GND	Ground
HSP	Handset Speaker Prompt
HVAC	Heating, Ventilation, and Air Conditioning
Hz	Hertz
ICD	Interface Control Document
IPT	Integrated Program Team
JWN	Justice Wireless Network
kHz	Kilohertz
MCV	Mobile Command Vehicle
MHz	Megahertz
Mic	Microphone
ms	Millisecond
mV	Millivolt
mW	Milliwatt
OTAR	Over-the-Air Rekeying
PABX	Private Automatic Branch Exchange
PC	Personal Computer
PL	Private Line
PMO	Program Management Office
POC	Proof of Concept
PSTN	Public Switched Telephone Network
PSWN	Public Safety Wireless Network
PTT	Push-To-Talk
RCS	Regional Communications System
RF	Radio Frequency
RMS	Root Mean Squared
RX	Receive
TCS	Transportable Communications System

TIA	Telecommunications Industry Association
TPDD	TPSRIU Preliminary Design Document
TPSRIU	Transportable Public Safety Radio Interoperability Unit
TSP	Terminal Strip Panel
TX	Transmit
UHF	Ultra High Frequency
V	Volt
VHF	Very High Frequency
VMR	Voice Modulation Recognition
VOX	Voice-Operated Transmit
W	Watt