PUBLIC SAFETY
PSWN PROGRAM
WIRELESS NETWORK

Saving Lives and Property Through Improved Interoperability

Vermont and New Hampshire Pilot Implementation—A Solution for Public Safety Wireless Interoperability

Interconnection of Incompatible Conventional VHF and UHF Radio Systems

Linked Microwave Systems and Additional Subscriber Units

Final

October 2001

EXECUTIVE SUMMARY

This report provides a detailed description of the approach developed to meet an interoperability requirement among public safety agencies from the states of Vermont and New Hampshire. These states provided the opportunity to develop a solution that would allow agencies with disparate land mobile radio (LMR) communications systems to communicate when agency-to-agency radio interoperability was required. The Public Safety Wireless Network (PSWN) Program selected this particular geographic location for several reasons. Recent history indicated that local, state, and federal agencies need to respond to situations along the border area between the two states. Lack of interoperable communications in this border area can be life threatening to the responding agencies' personnel.

This area also offered the opportunity to develop an interoperability solution for two incompatible conventional repeater radio systems. The State of Vermont operates a conventional ultra high frequency (UHF) repeater system, while the state of New Hampshire operates a conventional very high frequency (VHF) repeater system. Each state also operates and maintains its own microwave network. The microwave system in each state forms the backbone that interconnects the LMR sites with the dispatch center(s) within each state. The two states had no connectivity between the two microwave systems. After investigating several possible interoperability solutions, the Vermont–New Hampshire Integrated Program Team (IPT) decided that a two-step approach would provide the much-needed interoperability between the two states. The recommended first step was to provide mobile radio subscriber units, in the VHF frequency band, to the Vermont State Police to allow them to communicate directly into the New Hampshire State Police VHF LMR system. The recommended second step, which would provide a much broader interoperability capability, was to provide a microwave baseband link between the two states' microwave systems. This approach would allow dispatcher-controlled patching of conventional channels between all users, both internal and external, on each state's LMR system.

This document provides the basic, essential information needed to understand how the mobile radio subscriber units and microwave baseband link solutions were implemented and consequently, offers a resource for all public safety agencies interested in such a solution. More information on these two solutions, and other means for achieving interoperability, is available from the Public Safety Wireless Network (PSWN) Program, which sponsored and funded the development of the mobile radio subscriber unit and microwave baseband link concepts. The PSWN Program can be contacted by e-mail at information@pswn.gov or by telephone at 1-800-565-PSWN. The program's Web site, at www.pswn.gov, provides a wealth of information regarding public safety wireless interoperability.

TABLE OF CONTENTS

Page

1. INTRODUCTION 1
2. EVALUATION OF ALTERNATIVES 2
2.1 Fixed Site, Crossband Repeater 2
2.2 Microwave Baseband Link—Console-to-Console Patching 6
2.3 Additional Mobile Subscriber Units for Vermont State Troopers 10
3. SYSTEM COMPONENTS 11
3.1 Additional VHF Mobile Subscriber Units 11
3.2 Microwave Baseband Connectivity Between Vermont and New Hampshire 11
4. CONCLUSIONS AND OBSERVATIONS 13
APPENDIX A—ACRONYMS 1
APPENDIX B—MICROWAVE PATH PROFILES 1

1. INTRODUCTION

The Public Safety Wireless Network (PSWN) Program works with public safety agencies nationwide to help achieve interoperability—seamless, coordinated, integrated public safety wireless communications that promote safe, efficient protection of life and property. The PSWN Program works with the public safety community to improve the interoperability of wireless communications by promoting coordination and partnerships, seeking funding alternatives, advocating adequate public safety spectrum allocations and efficient spectrum use, supporting technical standards development, and fostering secure communications.

The development and implementation, for proof-of-concept purposes, of technical solutions for interoperability among public safety networks is one of the PSWN Program's main areas of activity. These solutions, which are initiated as pilot projects in various regions throughout the country, are developed jointly by the PSWN Program Management Office (PMO) and public safety radio and operational personnel from the region. The individuals involved most directly in pilot development and operation constitute the pilot's Integrated Program Team, or IPT. IPT members focus the pilot effort and technical concept to be proven into a discrete, repeatable solution for an interoperability shortfall common among public safety agencies throughout the Nation. This approach allows the PSWN PMO to leverage the solution beyond the pilot region, and more broadly, to benefit the public safety community as a whole.

After identifying a discrete interoperability shortfall along the Vermont–New Hampshire border, the PSWN Program contacted representatives from both states to form an IPT and initiate an interoperability pilot project. The PSWN Program sponsored a Vermont–New Hampshire IPT for almost 2 years. The IPT first supported an assessment of interoperability needs along the border area between the two states. The IPT then focused on pilot proof-of-concept activities targeting a specific interoperability shortfall, namely, the need for an interoperability solution between two disparate conventional radio systems to support certain public safety response scenarios. The IPT considered several alternatives—

- Fixed site, crossband repeaters composed of very high frequency (VHF) and ultra high frequency (UHF) mobile radios that would be cross-connected to allow VHF subscriber units to talk directly through the repeater to UHF subscriber units, and the reverse

- A microwave baseband link to connect the dispatch centers together for console-to-console interoperability patches

- VHF mobile radio subscriber units to allow the Vermont troopers to talk directly into the New Hampshire land mobile radio (LMR) system.

The PSWN Program and the Vermont–New Hampshire IPT recommended the development of a microwave baseband link and the procurement of VHF mobile radio subscriber units for the Vermont State Police vehicles.

2. EVALUATION OF ALTERNATIVES

The IPT evaluated four possible interoperability solutions for the Vermont–New Hampshire pilot project. The IPT determined the advantages and disadvantages of each solution and made a decision based on the combined needs of both states. This section presents the alternatives, along with supporting diagrams, to help the reader understand how they would work.

2.1 Fixed Site, Crossband Repeater

The first interoperability design considered for the states of Vermont and New Hampshire was a fixed site, crossband repeater to connect VHF and UHF mobile radios. The IPT determined the repeater should be designed with four Motorola GM-300 conventional mobile radios, one VHF transmitter and one UHF transmitter, and the relevant antennas, splitters, duplexers, cables, and antennas. This solution would be installed at a fixed radio site with sufficient antenna heights to provide interoperable communications in the desired area(s). Figures 1 and 2 are functional diagrams of how the fixed site repeater would provide the needed interoperability between Vermont and New Hampshire. Figure 1 shows a mobile radio unit from New Hampshire initiating the crossband repeater connectivity. The bold lines show the signal pathway through the crossband repeater, from the New Hampshire mobile unit to the Vermont mobile unit. Figure 2 shows a mobile radio unit from Vermont initiating the crossband repeater connectivity. The bold lines show the signal pathway through the crossband repeater, from the Vermont mobile unit to the New Hampshire mobile unit. Using both drawings, it is possible to see how the crossband repeater functions in each direction.

The IPT's detailed review of this solution yielded the following advantages and disadvantages:

ADVANTAGES

- It gives the state troopers complete control of the crossband repeater via their mobile units and a DTMF encoder.
- It adds options to the current operational plan.
- The trooper remains on his normal operational channel, or other selected frequencies.
- No dispatcher involvement simplifies the setup process to selecting the proper dual tone multi-frequency (DTMF) code.
- No leased telephone circuits or microwave circuits are required.
- It offers full site coverage from both VHF and UHF transmitters. There is no need for the trooper in the mobile unit to be within the coverage area of his or her own system infrastructure.

- It allows inexpensive mobile radio units to be used.

DISADVANTAGES

- Troopers must know the DTMF code for each radio site equipped with a crossband repeater and must know when to switch to a new code for a new coverage area.

- It requires multiple DTMF codes because if one DTMF code were used for all crossband repeaters, it would be possible to engage multiple repeaters at the same time, creating serious interference problems.

- If a trooper from either Vermont or New Hampshire is outside of his or her home system's coverage area, he or she will be unable to communicate with other members of his or her group.

- Coverage overlap between the crossband repeater and one or both state's base radio system infrastructure will most likely cause severe interference problems in the overlap areas.

- The proposed mobile radio units for the crossband repeater solution are more susceptible to site noise and interference problems than fixed site base stations and repeaters designed for that environment.

- The State of Vermont favors having the state trooper control the interoperability link, but the State of New Hampshire prefers a dispatcher initiated and controlled interoperability solution.

Figure 1
Crossband Repeater – New Hampshire to Vermont

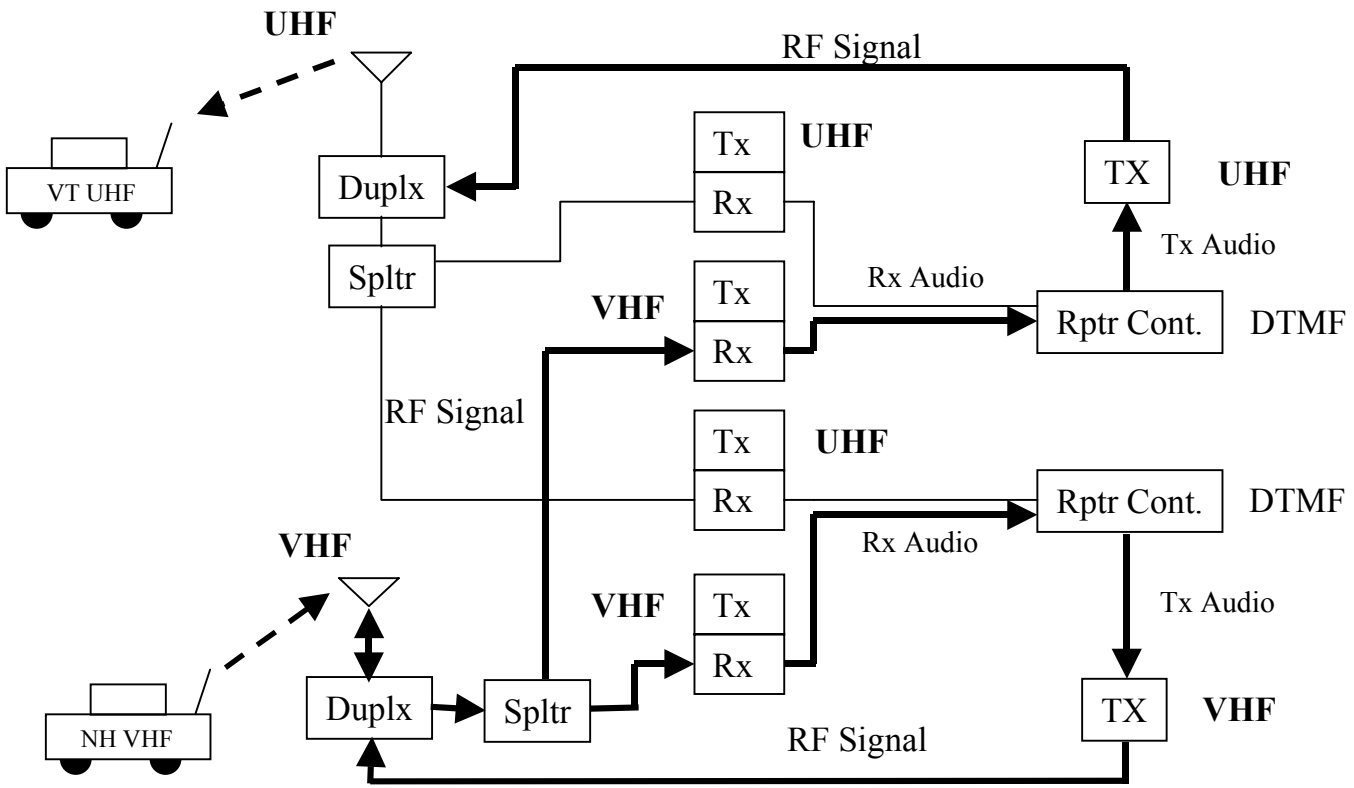

Legend:

Wired Connection

Radio Transmission

Example Flow Diagram – Follow Bold Lines:

1. The NH trooper sends proper DTMF sequence to NH base radios (VHF).
2. The signal is received by VHF base radios and routed to repeater controllers.
3. Repeater controllers see proper DTMF and send signal to both VHF and UHF transmitters.
4. Signal is repeated out to both NH and VT mobile units.
5. The VT trooper responds in the reverse direction through the repeater controllers and through both VHF and UHF transmitters.
6. The dispatchers can control this configuration via control stations, or microwave/wireline connections, and DTMF signaling.
7. When the interoperability need is over, either trooper can send the proper DTMF sequence to disable the cross band repeater link.

FIGURE 2
Crossband Repeater – Vermont to New Hampshire

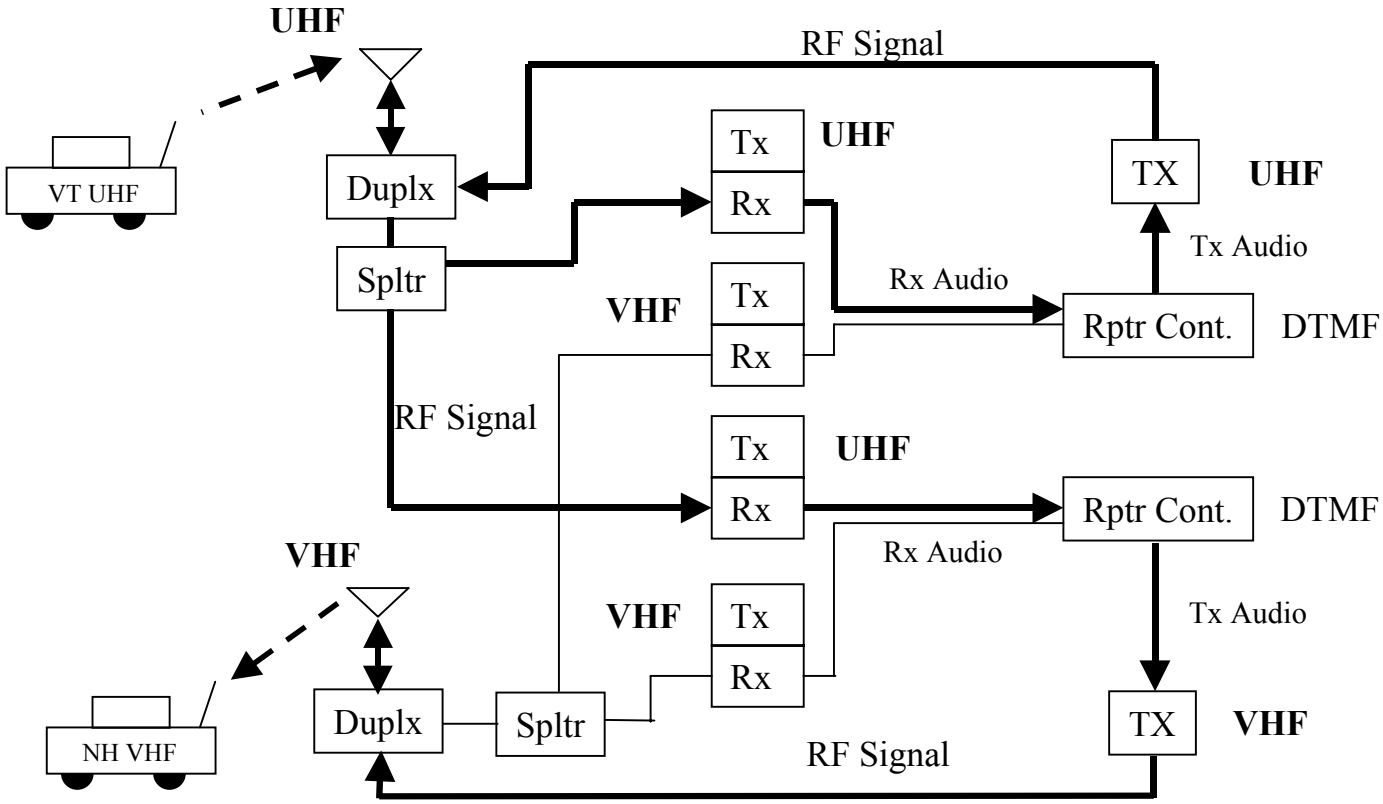

Legend:

Wired Connection

Radio Transmission

Example Flow Diagram – Follow Bold Lines:

1. The VT trooper sends proper DTMF sequence to VT base radios (UHF).
2. The signal is received by UHF base radios and routed to repeater controllers.
3. Repeater controllers see proper DTMF and send signal to both UHF and VHF transmitters.
4. Signal is repeated out to both NH and VT mobile units.
5. The NH trooper responds in the reverse direction through the repeater controllers and through both VHF and UHF transmitters.
6. The dispatchers can control this configuration via control stations, or microwave/wireline connections, and DTMF signaling.
7. When the interoperability need is over, either trooper can send the proper DTMF sequence to disable the cross band repeater link

2.2 Microwave Baseband Link—Console-to-Console Patching

Prior to the formation of the IPT, the State of Vermont was in the process of evaluating proposals to upgrade its statewide microwave network. This new network was intended to be a digital state-of-the-art system with loop protection. Meetings and discussions of the IPT revealed that it would be very beneficial to both states to provide a link between the microwave systems of Vermont and New Hampshire. It was determined that the best approach would be for the State of Vermont to reroute its microwave loop to include a site at Moose Mountain in New Hampshire. This approach would allow direct connectivity, at either a DS-0 or DS-1 level, between the two systems at the Moose Mountain site.

The states of Vermont and New Hampshire each operate a private microwave system to interconnect their remote sites and dispatch centers. Microwave circuits connect the LMR repeater sites in Vermont via to the dispatch centers. In New Hampshire, a microwave network provides the same connectivity. Upon reviewing this information, the IPT decided that a link between the two states' microwave systems would provide an opportunity for patching any of the repeater sites in one state to any of the repeater sites in the other state via console-to-console patches. This arrangement could provide maximum flexibility for interoperable radio communications between the two states.

The State of Vermont recently completed the design process and is currently finalizing the procurement process for a new, state-of-the-art digital microwave network. This was an ideal time to include a microwave baseband connectivity solution to provide interoperability between the two states. The State of Vermont determined that it could re-route one of its microwave paths to include a New Hampshire microwave site at Moose Mountain. This would break the path from Ascutney to Pierson Hill, two Vermont sites. The new configuration would be Ascutney Mountain, to Moose Mountain, to Pierson Hill. The State of Vermont is planning to implement a high-capacity, 6 gigahertz (GHz), digital microwave system, so there would be significant bandwidth available to link the dispatch centers of the two states together. The IPT agreed that two DS-1 links would be sufficient to connect the two states together for interoperability purposes.

Together, Figures 3 and 4 are the functional diagram of this interoperability solution. In Figure 3, a New Hampshire state trooper in Vermont requests a console-to-console patch to allow communications with a nearby Vermont state trooper. The bold lines in the drawing show the signal path from the New Hampshire state trooper to the Vermont state trooper. In Figure 4, a Vermont state trooper is in New Hampshire and requests a console-to-console patch to allow communications with a New Hampshire nearby state trooper. The bold lines in the drawing show the signal path that would provide this interoperability. In both cases, the state trooper that is outside state borders must still be able to talk with his or her own dispatcher for this solution to work.

Detailed review of this solution by the IPT yielded the following advantages and disadvantages:

ADVANTAGES

- The console-to-console interoperability solution makes the best use of all radio repeater sites in both states by patching the dispatch consoles of each state together.
- This solution requires no new LMR licenses, LMR equipment, or LMR repeater sites
- Dispatcher involvement and monitoring increase officer safety.
- All interoperability patches can be recorded if desired.
- The state troopers do not have to set up the console-to-console patch and can concentrate on the law enforcement duties at hand.
- The microwave link between the two states can provide more than just radio interoperability. High-speed data, video, and voice are examples of traffic that could be carried over the microwave system link.

DISADVANTAGES

- The interoperability radio coverage is limited to the existing radio coverage from each state's LMR system infrastructure. There may be other areas where interoperability is needed, but there is not sufficient radio coverage from both states' infrastructures.
- The microwave link between the two microwave systems is a single point of failure. If the console-to-console interoperability solution is used heavily, a backup leased T-1 service may be advisable.
- The existing communications towers at these three microwave sites are not all capable of handling the additional wind loading of the new microwave antennas and waveguides. The towers will need to be strengthened to accommodate the new equipment.
- Vermont is in favor of having the state troopers set up and remove the interoperability patches. In this solution, the dispatchers will be in control of the patching functions.
- There will be two new microwave paths that must be coordinated and licensed.
- Additional microwave equipment will be needed to provide the console-to-console connectivity and other circuit needs.

Figure 3
Console-to-Console Patch – New Hampshire Trooper in Vermont

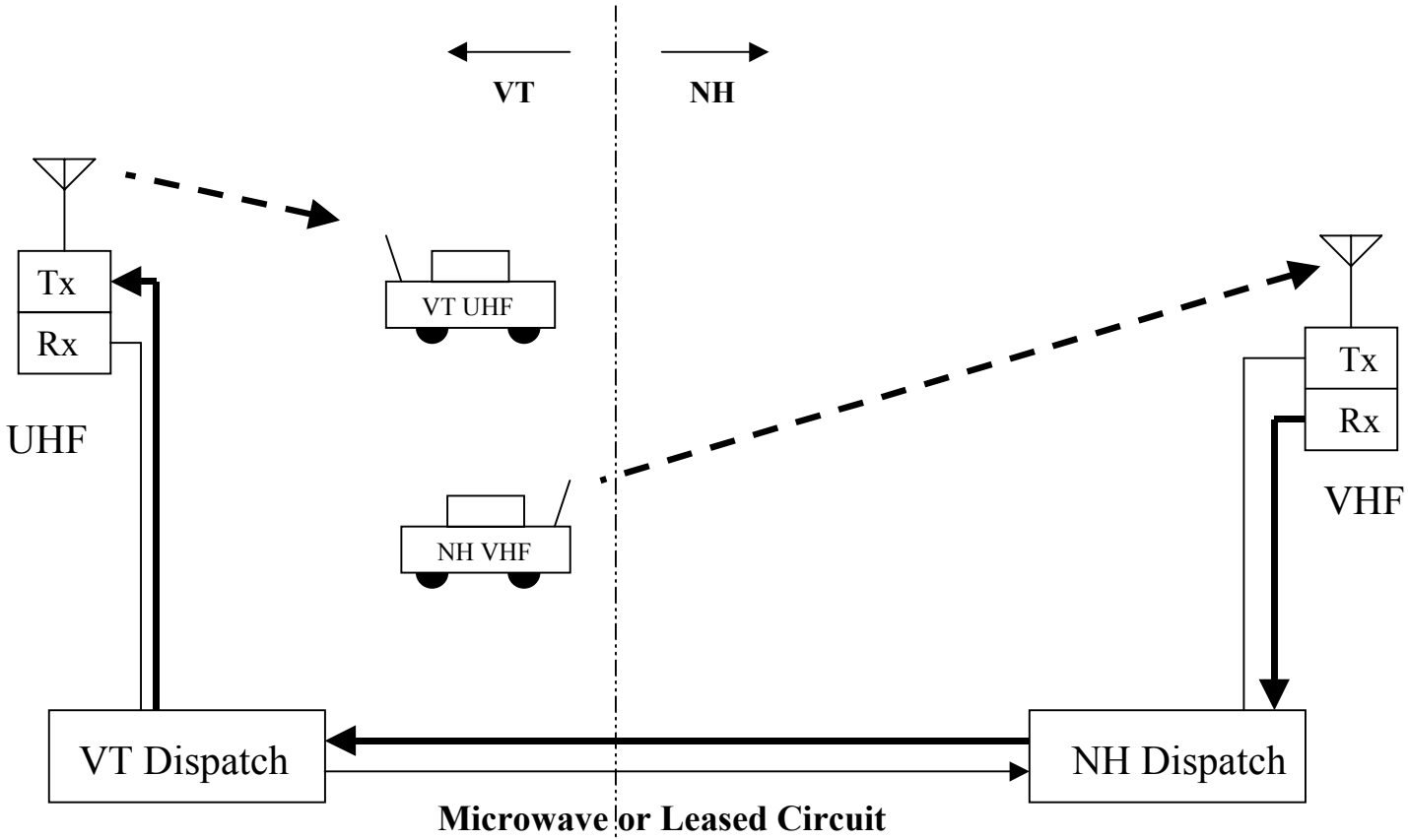

Legend:

Wired Connection

Radio Transmission

Example Flow Diagram – Follow Bold Lines

1. NH trooper calls for assistance.
2. Signal received by NH repeater and relayed to the NH dispatcher.
3. NH and VT dispatchers create console-to-console patch via microwave circuit.
4. VT dispatcher vectors VT trooper to assist NH trooper.
5. Communications between troopers is accomplished through each state's respective network.
6. Dispatchers monitor call and remove patch when call is complete.

Figure 4
Console-to-Console Patch – Vermont Trooper in New Hampshire

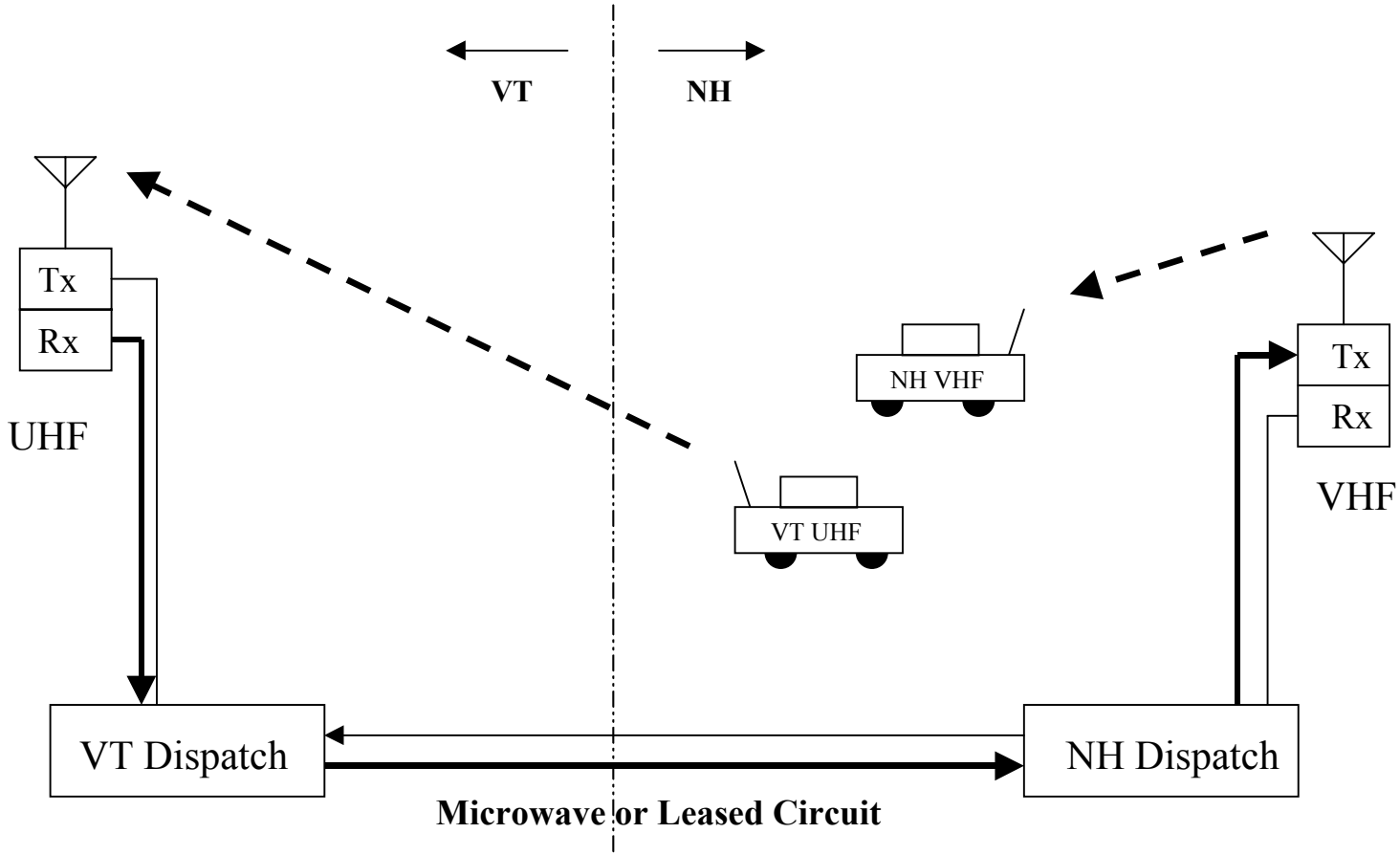

Legend:

Wired Connection

Radio Transmission

Example Flow Diagram – Follow Bold Lines

1. VT trooper calls for assistance.
2. Signal received by VT repeater and relayed to the VT dispatcher.
3. VT and NH dispatchers create console-to-console patch via microwave circuit.
4. NH dispatcher vectors NH trooper to assist VT trooper.
5. Communications between troopers is accomplished through each state's respective network.
6. Dispatchers monitor call and remove patch when call is complete.

2.3 Additional Mobile Subscriber Units for Vermont State Troopers

The IPT reviewed the alternatives for providing interoperability coverage in areas where the console-to-console solution would not provide the needed interoperability. The consensus of the IPT was that it would be best to operate dual mobile radio units in the Vermont state police vehicles. The IPT determined that it would take 150 mobile radio units to equip the state police vehicles for state-to-state interoperability. The mobile radio units were ordered and delivered to the Vermont state police radio shop. This was a straightforward solution providing the needed interoperability between the Vermont state police and the New Hampshire state police.

Detailed review of this solution by the IPT yielded the following advantages and disadvantages:

ADVANTAGES:

- This solution requires no modifications to the existing infrastructure in either state. It is simple and straightforward to implement.
- This solution requires no patching or DTMF signaling to activate. The mobile units can access the adjacent system simply and directly.
- The state troopers can operate the new mobile units with a minimum of training. No special patching procedures are required.
- The new mobile units can be programmed to access any or all of the New Hampshire repeater sites. This flexibility can provide a wide area of interoperable communications coverage.

DISADVANTAGES:

- More equipment in the vehicle means less room for the trooper to operate the vehicle and stow other gear.
- Two radios can cause confusion if the trooper is not sure who is calling on which radio. Thus, the trooper must be careful to answer the caller on the correct radio.
- The additional radio unit needs its own antenna. This means an additional antenna attached to the body of the state police vehicle.

3. SYSTEM COMPONENTS

The IPT decided to implement two of the three alternatives to provide the needed interoperability to the states of Vermont and New Hampshire. The components required to implement each solution are noted below. As of this writing, the State of Vermont has not yet completed a contract with its chosen microwave system vendor. Therefore, this section presents a high-level overview of what the final components for the microwave baseband link interoperability should be.

3.1 Additional VHF Mobile Subscriber Units

The State of Vermont identified a need for 150 VHF mobile radio units to equip its state police vehicles. The PSWN Program provided 150 Motorola, Model CDM-1250, VHF (136–174 MHz), 25 to 45 watt, 64-channel mobile radio units. In addition, the PSWN Program provided 150 external-mount VHF mobile antennas for the 150 Vermont state police vehicles. This hardware was delivered directly to the State of Vermont radio maintenance facility and inventoried by representatives from the State of Vermont and the PSWN Program. The mobile radio units are currently being installed into the Vermont state police vehicles.

3.2 Microwave Baseband Connectivity Between Vermont and New Hampshire

The State of Vermont is in the process of completing contract negotiations with its selected microwave equipment vendor. When that process is completed, the state will begin implementation of a new digital, 6 GHz, high-capacity, loop-switched microwave system. The proposed baseband connectivity with the State of New Hampshire was included in the final negotiations between the State of Vermont and the selected microwave equipment vendor, so the best proposal pricing was negotiated for the interoperability portion of the microwave procurement. As part of the contract negotiations with the microwave vendor, the State of Vermont has developed path profile information for the two new microwave paths that will provide common access to the Moose Mountain site. This profile information is included in Appendix B of this report.

The States of Vermont and New Hampshire agreed the best location to connect the two microwave systems together would be at the Moose Mountain site, located in New Hampshire. Connecting at this site would require rerouting one leg of the proposed Vermont digital microwave system. The final configuration has two new paths in the microwave system loop: Ascutney Mountain to Moose Mountain and Moose Mountain to Pierson Hill. Several new components will be required to provide the needed connectivity between the two microwave systems of Vermont and New Hampshire

- A microwave transceiver at Moose Mountain, with multiplexer, to complete the link from Ascutney Mountain to Moose Mountain

- A microwave transceiver at Moose Mountain, with multiplexer, to complete the link from Pierson Hill to Moose Mountain

- Two digital channel banks at Moose Mountain to provide 24 DS-0 circuits for each of the two new links

- One or two (depending upon the final configuration) DS-1 interface device(s) to allow direct connection between Vermont and New Hampshire at the DS-1 rate

- New parabolic microwave antennas at Moose Mountain to accommodate the new microwave paths

- New elliptical waveguide, connectors, tower attachment kits, shelter entry boots, and grounding kits to connect the new antennas at Moose Mountain to the microwave transceivers

- Waveguide pressurization equipment for the new waveguides at Moose Mountain

- Additional DC power for the new microwave transceivers at Moose Mountain

- Sufficient heating, ventilation, and air conditioning (HVAC) for the new microwave transceivers at Moose Mountain

- Upgrading of the antenna tower at Moose Mountain to accommodate the additional wind loading of the new microwave antennas

- Frequency coordination and licensing in the 6 GHz band for the two new microwave paths.

While the 150 VHF mobile radio units are currently being installed in the Vermont state police vehicles, the implementation of the microwave baseband link between the states of Vermont and New Hampshire is on hold pending the completion of contract negotiations between State of Vermont and its selected microwave vendor. When that contract is completed, the PSWN Program will be able to accurately assess its involvement in the procurement and implementation of the microwave baseband link.

4. CONCLUSIONS AND OBSERVATIONS

This interoperability pilot provides a much-needed communications enhancement for the states of Vermont and New Hampshire. During the course of the project, however, the IPT addressed many challenges. The coordination and cooperation of the IPT members were key factors in producing a practical and effective interoperability solution, allowing wireless communications between the users of two disparate conventional radio systems. Listed below are some of the key lessons learned from this pilot project:

- Agencies operate differently, and these operational differences addressed, not discounted. For example, the State of Vermont prefers to have its troopers in the field in control of interoperability equipment. The State of New Hampshire, however, prefers to have its dispatchers in control of interoperability equipment. Thus, different equipment control approaches are required.

- The public safety dispatch centers are not always centralized. The State of New Hampshire has centralized dispatch operations. The State of Vermont has several dispatch locations.

- The IPT must be able to reach consensus on the configuration for the interoperability solution that will best meet the needs of the various participating agencies.

- Because most interoperability solutions include a technical component as well as an intergovernmental agreement component, the IPT must consist of the appropriate blend of technical and management personnel to ensure the success of the project.

- When the interoperability solution is being integrated into a new system procurement, such as the State of Vermont's new digital microwave system, the IPT must be prepared for the delays that often accompany the procurement process.

- When the interoperability solution is part of an overall procurement by one of the participating agencies, the IPT must be prepared to determine how the interoperability portion of the procurement will be funded, independent of the overall procurement.

- The most basic solutions are sometimes the best solutions. After expending a great deal of time discussing fixed site and crossband repeaters, the final consensus was to provide VHF mobile radio units for the Vermont state police vehicles.

- Identifying key technical personnel early in the process is crucial to developing and implementing the best possible interoperability solution(s). These personnel know their systems better than anyone else does, and they can quickly determine what will and will not work.

APPENDIX A—ACRONYMS

AC	Alternating Current
DC	Direct Current
DS-0	Digital data service @ 64 kilobits per second
DS-1	Digital data service @ 1.544 megabits per second
DTMF	Dual Tone Multi Frequency
DUPLX	Duplexer
GHz	Gigahertz
HVAC	Heating-Ventilation-Air Conditioning
Hz	Hertz
IPT	Integrated Program Team
LMR	Land Mobile Radio
MHz	Megahertz
NH	New Hampshire
PMO	Program Management Office
PSWN	Public Safety Wireless Network
RF	Radio Frequency
RX	Receiver
SPLTR	Splitter
T-1	Digital data service @ 1.544 megabits per second
TX	Transmitter
UHF	Ultra High Frequency
VHF	Very High Frequency
VT	Vermont

APPENDIX B—MICROWAVE PATH PROFILES

PATH B-1: MOOSE MOUNTAIN TO ASCUTNEY MOUNTAIN

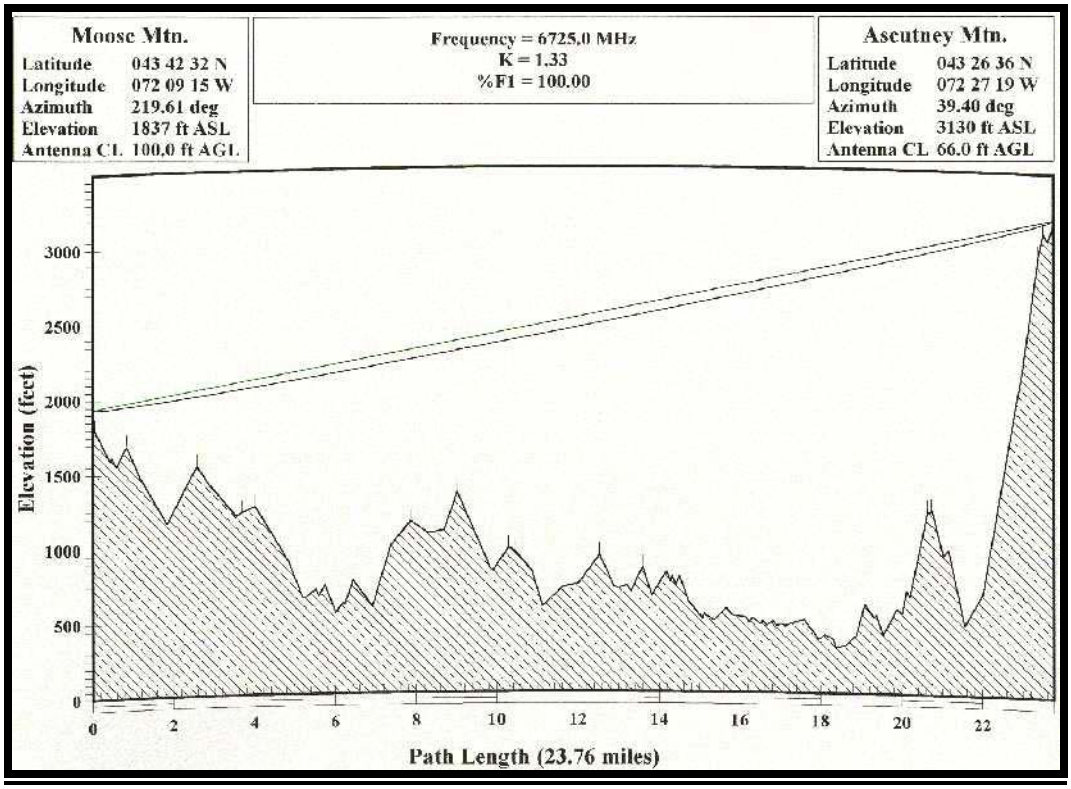

PATH DESCRIPTION

Moose Mtn. to Ascutney Mtn.

Terrain/Climate: Northeastern US. Mountainous and lower rolling hills terrain. Mostly rural, some agricultural. Long winters, common spring rain cells, fog in fall during early morning hours. Streams and small rivers but no significant overwater segments.

Path Point	Description
0.0	Moose Mtn.
0.02	Critical clearance. Trees near-in at Moose Mtn., measured.
0.0-1.9	Moose Mtn., mountainous, undeveloped, dense wooded.
1.9-5.5	Rural rolling hills, tree coverage 70%. Scattered home sites.
5.5-7	Lebanon NH. Residential and commercial areas.
5.9	Interstate 89.
7.0-15.5	Rolling rural hills, tree coverage 70%. Scattered homes.
8.0	Farnum Hill.
15.5-16.2	Plainfield VT, mostly residential.
16.2-18.3	Rolling terrain, scattered development. Trees 50%.
18.4	Connecticut River, 600' overwater. Path enters VT.
18.4-18.8	Golf Course.
18.8-20.0	NW. side of Windsor, VT, residential, trees 40%.

Path Point	Description
20.1	Interstate 91Undeveloped, hilly, dense wooded.
21.5-22.0	Rural residences.
22-23.7	Elevation rises sharply to Ascutney Mtn. South Peak
23.71	Critical clearance point. Trees near-in at Ascutney Mtn. S. Peak.
23.76	Ascutney Mtn.

PATH B-2: MOOSE MOUNTAIN TO PIERSON HILL

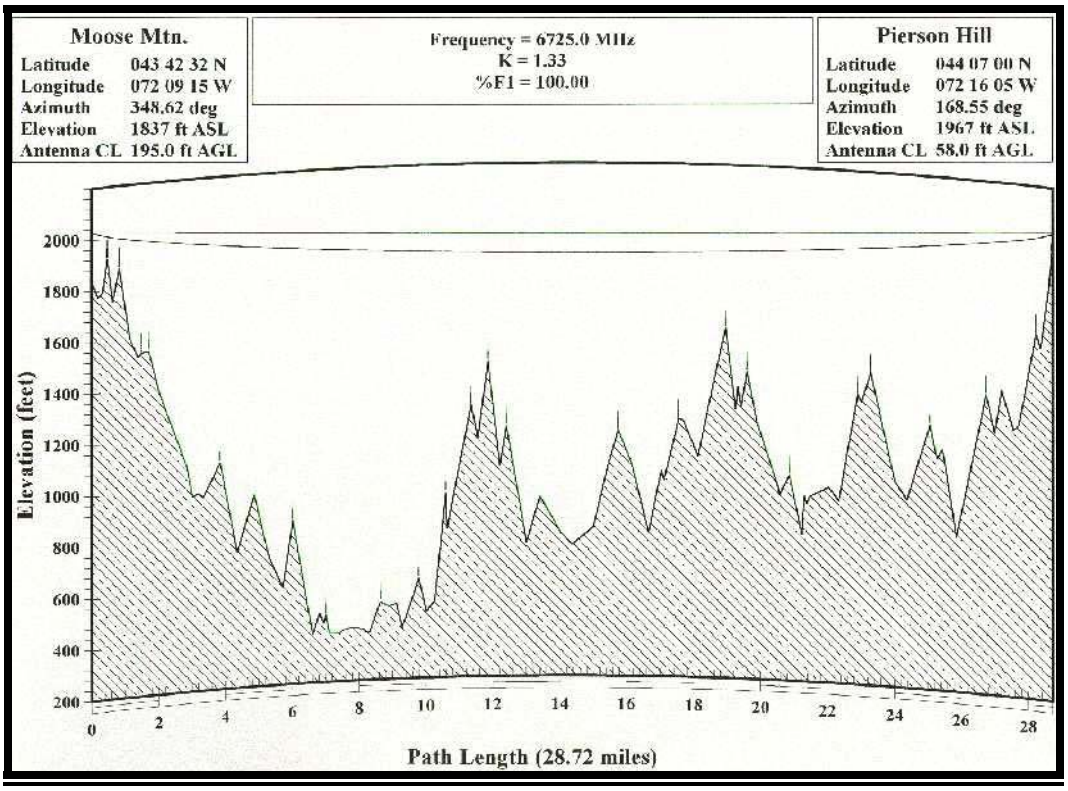

PATH DESCRIPTION

Moose Mtn. to Pierson Hill

Terrain/Climate: Northeastern US. Mountainous and lower rolling hills terrain. Mostly rural, some agricultural. Long winters, common spring rain cells, fog in fall during early morning hours. Streams and small rivers but no significant overwater segments.

Path Point	Description
0.0	Moose Mtn.
0.0-1.8	Moose Mtn. Mountainous, undeveloped, dense wooded (90%).
0.0-1.9	NOTE: WILL FILL IN DATA HERE WITH SECOND DRAFT
0.47	Critical clearance. Ridge elevation along SW. side of South Peak. Dense woods, tall trees. Height & ground elevation measured. Area accessed via logging trail off from Moose Mtn. site access road.
1.8-7.0	Rolling lower rural hills. Scattered home sites in valleys. Tree coverage about 75%.
7.1-7.4	Connecticut River, overwater.
7.4-8.17	Lowlands, undeveloped, no trees.
8.17-8.3	Connecticut River, overwater.
8.3-10.2	Rolling lower terrain, rural home sites.
10.2	Interstate 91.
10.3-12.8	Ely Mountain, mountainous, tree coverage 95%.
12.8-18.1	Rolling rural hills. Tree coverage about 80%.
18.1-20.0	Old Buffalo Hill. Trees 85%.
20.0-27.7	Rural rolling hills. Tree coverage 80%. Residences in valleys.

Path Point	Description
27.7-28.7	Elevation rises to Pierson Hill, dense wooded.
28.69-28.7	Critical clearance. Trees near in at Pierson Hill, measured.
28.72	Pierson Hill.